SECTION 400:
WATER DISTRIBUTION SYSTEM
CONSTRUCTION STANDARDS

Page No.	Description
400-3	**401 GENERAL**
400-3	401.1 SPECIFICATIONS
400-3	401.2 START OF CONSTRUCTION
400-3	401.3 CONNECTION TO EXISTING WATER MAINS
400-3	401.4 UTILITY IDENTIFICATION
400-4	401.5 AS-BUILTS
400-5	**402 MATERIALS**
400-5	402.1 DUCTILE IRON PIPE
400-5	402.2 PIPE FITTINGS
400-5	402.3 JOINTS
400-5	402.4 RETAINER GLANDS
400-5	402.5 CASING PIPES
400-6	402.6 PIPE BEDDING
400-6	402.7 PIPE WRAP
400-7	402.8 VALVES
400-8	402.9 TAPPING AND LINE STOP SLEEVES
400-8	402.10 INSERT VALVES
400-9	402.11 CURB STOPS
400-9	402.12 CURB BOXES
400-9	402.13 VALVE BOXES
400-9	402.14 VALVE VAULTS
400-10	402.15 FIRE HYDRANTS
400-12	**403 CONSTRUCTION REQUIREMENTS**
400-12	403.1 GENERAL REQUIREMENTS
400-12	403.2 PIPE INSTALLATION
400-16	403.3 VALVES
400-16	403.4 TAPPING AND LINE STOP SLEEVES
400-17	403.5 INSERT VALVES
400-17	403.6 CURB BOXES
400-17	403.7 VALVE BOXES
400-17	403.8 VALVE VAULTS
400-18	403.9 FIRE HYDRANTS
400-18	403.10 THRUST BLOCKING AND TIE RODS
400-19	403.11 RETAINER GLANDS

400-20 **404 INSPECTION AND TESTING**
400-20 404.1 GENERAL INFORMATION
400-20 404.2 TESTING FOR TAPPING SLEEVES AND INSERT VALVES
400-20 404.3 PRESSURE TESTING
400-21 404.4 DISINFECTION (CHLORINATION)
400-24 404.5 FINAL FLUSHING AND TESTING

400-25 **490 STANDARD DETAILS**

401 GENERAL

The standards and requirements found in this article are for materials and construction of water mains within the City of Naperville, Illinois.

401.1 SPECIFICATIONS

These specifications cover pipe and fittings and items normally used for water distribution systems. Special considerations will be covered in the plans and special provisions. Water distribution systems shall be constructed in accordance with the Standard Specifications for Water and Sewer Main Construction in Illinois, latest edition, except as modified herein. In cases of conflict between standards, the more restrictive standard shall apply, as determined by the City Engineer.

401.2 START OF CONSTRUCTION

The contractor shall not begin construction until all required permits have been obtained. Copies of all permits obtained by outside agencies must be provided to the city prior to the start of construction.

401.3 CONNECTION TO EXISTING WATER MAINS

Connections to all City water mains must be by pressure tap or with the use of linestop(s) unless otherwise approved by the City Engineer, as shown on the approved engineering plans.

401.3.1 NOTIFICATION

When connecting to the end of an existing line, work must be coordinated with the Department of Public Utilities with 48-hour notice. Personnel from the Department of Public Utilities are the only ones who are to operate water main valves. When water is needed to chlorinate new lines from adjacent City mains which are in service, Department of Public Utilities personnel must be present to operate or witness the contractor operation of existing City valves.

A representative from the Department of Public Utilities must be present at all connections to existing water mains. New water main valves, including pressure tap valves, adjacent to an existing water main, and existing water main valves shall only be operated by the City of Naperville, Department of Public Utilities CEE/CM Division personnel with 48-hour notice (Monday-Friday). 630-420-4122.

401.4 UTILITY IDENTIFICATION

A wood 4 inch by 4 inch by 6 foot stake with not less than the top 2 feet painted blue shall be installed next to each water vault, buffalo box, and valve box for protection of that appurtenance. The stake shall be maintained in a plumb position.

When newly poured curbs are installed, the contractor shall use a city approved stamp to indent the wet concrete with a "W" to identify the location of each water vault, buffalo box, and valve box. The letter "W" will be indented at the top of the curb 1-1/2 inches to 2 inches in height and width and at a depth of 3/8 inch. In areas where new curbs are not present or if the developer

and/or the contractor fail to indent the curbs as outlined above, the City will then require that identification symbols as approved by the City Engineer be cut into the curb.

401.5 AS-BUILTS

Upon completion of work, the contractor shall provide as-built locations of all water main, valves, line stops, curb stops, and hydrants in conformance with the requirements of Section 110 of the Naperville Standards Specifications.

402 MATERIALS

Specific references made herein for manufactured materials such as pipe, hydrants, valves and fittings refer to designations for American Water Works Association (AWWA) or to the American National Standards Institute (ANSI). Nothing herein shall constitute or imply an endorsement by the City of Naperville of any one material over another.

402.1 DUCTILE IRON PIPE

Ductile Iron pipe shall conform to ANSI/AWWA C151/A21.5-02 (or latest edition). The minimum thickness designation shall be Class 52. Casting, marking, testing, etc. shall be provided in accordance with applicable ANSI or AWWA standards. Cement lining shall be provided in accordance with ANSI/AWWA C104/A21.4-03 (or latest edition).

402.2 PIPE FITTINGS

All cast and ductile iron fittings shall conform to the latest ANSI/AWWA C110/A21.10-03 (or latest edition) for short body, cast and ductile iron fittings, 3 inches to 48 inches in diameter. Ductile iron compact fittings 3 inches to 24 inches in diameter shall be in accordance with ANSI/AWWA C153/A21.53-00 (or latest edition).

402.3 JOINTS

Joints for ductile iron pipe shall consist of one of the two following types unless otherwise provided in the special provisions:

a) Mechanical Joints with stainless steel nuts, bolts and washers, Type 304 or better.

b) Push-On Rubber Gasket Joints: AWWA C600-99 (or latest edition). Gaskets for water main located within 100 feet of a vehicle fueling facility shall be Buna N or Fluorocarbon rubber.

402.4 RETAINER GLANDS

For use on ductile iron pipe conforming to ANSI/AWWA C151/A21.51-02, nominal pipe sizes 3 inches through 48 inches, mechanical joint wedge action retainer glands shall be used as required to restrain valves, fittings, hydrants, and pipe joints. The retainer glands shall be:

a) MEGALUG 1100 Series as manufactured by EBAA IRON, INC., or

b) Uni-Flange Blockbuster 1400 Series from Ford Meter Box Co., or approved equal

Existing ductile iron systems requiring restraint shall be Series 1100SD (split MEGALUG) for mechanical joints. Restraint system for restraining push-on pipe bells shall be MEGALUG Series 1100HD, or FORD Series 1390. All nuts, bolts and washers shall be stainless steel, Type 304 or better.

402.5 CASING PIPES

Casing pipe shall be steel with a wall thickness as shown in Table 400-1. It shall be bituminous coated, a minimum of 30 mils thickness inside and out, and shall be of leak proof construction,

capable of withstanding the anticipated loadings. The steel casing pipe shall have minimum yield strength of 35,000 psi and shall meet the requirements of A139/A139M-04 (or latest edition), Grade B. Ring deflection shall not exceed 2% of the nominal diameter. The steel casing pipe shall be delivered to the jobsite with beveled ends to facilitate field welding.

TABLE 400-1
STEEL CASING PIPE WALL THICKNESS

Casing Diameter	Minimum Wall Thickness (inches)
20” and 22”	0.344
24”	0.375
28”	0.438
30”	0.469
32”	0.501
34” and 36”	0.532

402.6 PIPE BEDDING
The material used for pipe bedding shall consist of gravel, crushed gravel, or crushed stone conforming to the requirements of Article 1004.01 of the "Standard Specifications for Road and Bridge Construction", prepared by the Illinois Department of Transportation. The gradation shall conform to gradation CA-7 or CA-11 of the Standard Specifications.

402.7 PIPE WRAP
The polyethylene film utilized for pipe wrap shall be in accordance ANSI/AWWA C105/A21.5-99 (or latest edition). The film shall have a minimum thickness of 0.008 inch (8 mils). The minus tolerance of thickness shall not exceed 10 percent (10%) of the nominal thickness. The tube size or sheet width shall be as shown in Table 400-2.

TABLE 400-2
PIPE WRAP SIZE

Nominal Pipe Diameter	Flat Tube (inches)	Sheet Width (inches)
3”	14	28
4”	16	32
6”	20	40
8”	24	48
10”	27	54
12”	30	60
14”	34	68
16”	37	74
18”	41	82
20”	45	90
24”	54	108

402.8 VALVES

402.8.1 MANUFACTURER AND MARKING

All valves shall be standard pattern and shall have the name or mark of the manufacturer, size and working pressure plainly cast in raised letters on the valve body. Valves may be approved from one of the following manufacturers: American, Clow, Waterous or Kennedy.

402.8.2 TYPE AND MOUNTING

a) The valve bodies shall be cast or ductile iron, mounted with approved non-corrosive metals. All wearing surfaces shall be of approved non-corrosive material.

b) All valves shall be resilient wedge gate valves with non-rising stems with upper and lower thrust collars. Waterways shall be smooth and have no groove or depression where foreign material can lodge and prevent sealing. The stem shall be bronze or other approved non-corrosive metal. All valves shall open by turning counterclockwise. Resilient wedge gate valves shall meet the standards of AWWA C509-01 or AWWA C515-01 (or latest edition).

c) All nuts, bolts and washers shall be stainless steel, Type 304 or better.

d) End Connections - End connections of all valves shall be the mechanical joint type.

402.8.3 VALVE STEM SEALS

Unless otherwise designated in the special provisions, all valves shall be furnished with O-Ring Stem Seals. Number, size and design shall conform to the AWWA Standard for R/W valve O-Ring Stem Seals.

402.8.4 WRENCH NUTS

Wrench nuts shall be made of cast iron and shall be 1-15/16 inches square at the top, 2 inches square at the base, 1-3/4 inches high, unless otherwise designated in the Special Provisions. Nuts shall have a flanged base upon which shall be cast an arrow at least 2 inches long showing the direction of the opening. The word "open" in 1/2 inch or larger letters shall be cast on the nut to clearly indicate the direction of opening the valve. All operating nuts shall be accessible from above grade with use of an operating key.

402.8.5 FACTORY TESTING

Each valve shall be tested at the factory for performance and operation prior to painting. Each 3 inch to 20 inch R/W valve shall be subjected to a hydrostatic pressure test per AWWA C509-01 or AWWA C515-01 (or latest edition).

402.8.6 FACTORY COATINGS

After the factory test and inspection, all ferrous parts of the valves except finished or bearing surfaces shall have a fusion bonded epoxy coating which complies with AWWA C550-05 (or latest edition).

402.9 TAPPING AND LINE STOP SLEEVES

Tapping sleeve shall be made of cast iron, ductile iron or heavy-duty stainless steel. All approved stainless steel heavy-duty tapping sleeves shall be Cascade CST-EX, Ford FTSS, Romac Industries SST III, or Smith Blair Model 665. All nuts, bolts and washers shall be stainless steel, Type 304 or better.

Line stop sleeves shall be stainless steel. Approved sleeves include Severn Trent Premier line stop fitting of all stainless steel construction with drop-in bolt option and Smith Blair Model 685 all stainless steel line stop tapping sleeve. All bolts, nuts, washers and blind flanges are to be 18-8 Type 304 Stainless. Stopple (completion) plug is to be ductile iron.

All tapping and line stop sleeves shall conform to the following:

a) Sleeve to be pressure rated at 150 psi working pressure and 225 psi test pressure.

b) Construction to be T-304, 18-8 stainless steel, 14 gauge minimum.

c) Gaskets to provide 360 degree pipe coverage in addition to a full circumference branch seal gasket.

d) A stainless steel test port and plug shall be provided and the sleeve installation shall be tested prior to cutting the existing pipe.

e) V-lugs shall be fabricated to the sleeve and drop-in stainless steel bolts, nuts and washers provided. Nuts shall be coated to prevent galling.

402.10 INSERT VALVES

402.10.1 DOUBLE DISC INSERT GATE VALVE

The materials, internal design, construction, workmanship, and manufacture's tests of insert valves shall conform to AWWA Standard C-500-02 or the latest revision, as modified by the following:

a) Valves shall be of a ductile iron body, bronze-mounted, non-rising stem, double non-revolving disc, parallel seat, and side wedging construction.

b) All grey-iron castings shall conform to the requirements of ASTM Specification A126 Class B (31,000 psi minimum tensile strength), or the latest revision.

c) All nuts, bolts and washers shall be stainless steel, Type 304 or better.

d) Valve stems shall be cast, forged or rolled bonze, and free from defects.

e) Valves shall have a mechanical joint bell end, one bell being larger than normal to accept the inserting sleeve. Bells shall contain elastomeric gaskets permanently attached in a plane perpendicular to the centerline of the bore.

f) Valves shall be rated at 150 psig test with 80 psig working water pressure.

g) No bypass will be required.

h) Valves shall open to the left or counter-clockwise.

i) Valve stem seals shall consist of conventional stuffing boxes, or “O-ring type” seals. Gland bolts and nuts shall be of the same quality bronze as the valve stems.

j) Insert Sleeve- Each insert valve shall be provided with a split sleeve of the stuffing box type. Said sleeve shall have a bell mechanical outlet outboard of the valve for sealing to the conduit.

k) The Contractor shall submit three copies of all drawings, furnished by the manufacture, fully and distinctly illustrating and describing the insert valve and sleeve proposed to be furnished.

l) Double disk insert gate valve to be U.S. Pipe, or approved equal.

402.10.2 RESILIENT TYPE INSERT GATE VALVE
Valve shall be as manufactured by Occlude with material that meets and/or exceeds the AWWA C509-01 or AWWA C515-01 (or latest edition) valve specification. All nuts, bolts and washers shall be stainless steel, Type 304 or better.

402.11 CURB STOPS
Curb stops shall be compression type by Mueller, Ford or A.Y. McDonald.

402.12 CURB BOXES
Curb boxes (B-Boxes) shall be arch type, 1 inch I.D. box with rod for a 1 inch curb stop, and a 1-l/4 inch I.D. curb box for a 1-1/2 inch curb stop or larger with rod. One inch curb boxes shall have a 1 inch threaded brass pentagon plug with the word “WATER” in raised letters on the cap (1- l/4 inch curb boxes shall have a 1-1/4 inch plug).

402.13 VALVE BOXES
Valve boxes/lids shall be Tyler, two-piece with drop lid, 6850 series (screw type, 5-1/4 inch shafts), or approved equal. Valve boxes and extensions must be cast iron and conform to the requirements of Standard Specifications for Gray Iron Castings, ASTM Designation A-48.

402.14 VALVE VAULTS
Valve vaults shall be constructed of precast concrete units in accordance with ASTM C478-05 (or latest edition) and Section 32 of the "Standard Specifications for Water and Sewer Main Construction in Illinois," and shall follow the City of Naperville standards. All valve vaults shall be water-tight. All visible leaks shall be sealed in a manner acceptable to the City Engineer.

402.14.1 FRAME AND COVER

a) Valve Vaults shall be furnished with a self-sealing frame and slotted cover (Heavy Duty Neenah Foundry R-1772, Heavy Duty East Jordan Iron Works 1022-Z3 or approved equal). Pick holes shall not create openings through the vault cover.

b) The word "WATER" shall be imprinted on the cover in raised letters.

c) Frames and lids shall meet or exceed AASHTO H-20 loading specifications.

d) Frames shall be shop painted with asphaltic base paint.

e) Both the vault frame and cover shall have machined horizontal and vertical bearing surfaces.

402.15 FIRE HYDRANTS

a) All fire hydrants shall have 5-1/4 inch valve opening.

b) All materials used in the production of fire hydrants for ordinary service shall conform to the specifications designated for each material listed in AWWA Standard C502-05 (or latest edition).

c) The hydrant shall be Waterous Pacer WB-67 5-1/4 inch valve opening, Mueller A-423 5-1/4 inch valve opening, or Clow Medallion 5-1/4 inch valve opening and of a pattern approved by the City Engineer. The seat must be of bronze to bronze. The name or mark of the manufacturer and size of the valve opening shall be plainly cast in raised letters and so placed on the hydrant barrel as to be visible after the hydrant has been installed.

d) Lugs, if required for harnessing the hydrant to the connection pipe from the main in the street, shall be provided on the bell of the elbow or on the hydrant bottom casting. A drawing of the lug construction shall be submitted for approval, on request of the City Engineer.

e) Hydrants shall be breakaway/traffic style. Breaking devices shall be at the breakaway flange which will allow the hydrant barrel to separate at this point with a minimum breakage of hydrant parts in case of damage. There shall also be provided at this point, a safety stem coupling on the operating stem that will shear at the time of impact. Unless otherwise specified, all hydrants shall be equipped with o-ring stem seals. The breakaway flange is to be just above the proposed ground level per manufacturer specifications.

f) Hydrant cap chains and chain hooks are not to be installed on hydrant. If any chains and chain hooks have been installed, they shall be removed prior to final acceptance.

g) The dimensions and details of hydrants and nozzles, unless otherwise noted, shall be as follows:

Hydrant connection pipe size inside diameter:	6 inches
Standpipe minimum inside diameter:	6 inches
Length of hydrant from bottom of hydrant connection to breakaway flange:	5-1/2 foot bury depth min.
Valve opening diameter:	5-1/4 inches
Size of auxiliary gate valve:	6 inches
Hose nozzles, number and size:	Two 2-1/2 inch & one 4-1/2 inch

Hydrant 6" Connection Thread Details:	
Steamer Nozzles:	National Standard Hose Thread
Diameter at root of thread:	National Standard Hose Thread
Pattern of thread:	National Standard Hose Thread
Total length of threaded male nipple:	National Standard Hose Thread

h) All nozzles shall be fitted with cast iron threaded caps with operating nut of the same design and proportions as the hydrant stem nut. Caps shall be threaded to fit the corresponding nozzles and shall be fitted with suitable gaskets for positive water tightness under test pressures.

i) All nuts, bolts and washers shall be stainless steel, Type 304 or better.

j) The operating nuts on hydrant stem and nozzle caps shall be the same for all sizes of hydrants. Dimensions shall be as follows:

1) Pattern of Nut: Pentagonal

2) Height: 1-1/16 inch

3) Size of Pentagon: 1.35 inch at bottom of nut 1.23 inch at top of nut measured from point to flat

k) The hydrant valve shall open by turning to the left (counterclockwise).

402.15.2 FACTORY TESTING

Before the hydrant is painted at the factory, it shall be subjected to a minimum hydrostatic test of 300 pounds per square inch with the hydrant valve in a closed position and again with the hydrant valve in an open position

402.15.3 PAINTING

All iron parts of the hydrant, both inside and outside shall be thoroughly cleaned and thereafter painted with one coat of paint of a durable composition, and two additional exterior coats of Tneme-Gloss Safety Orange (#E0119) per National fire code specifications (final coat shall be applied after installation).

403 CONSTRUCTION REQUIREMENTS

403.1 GENERAL REQUIREMENTS

403.1.1 RESPONSIBILITY FOR MATERIALS

The contractor shall be responsible for the acceptability and storage of all materials furnished by him and shall assume responsibility for the replacement of all such material found damaged in shipping or on job site or defective in manufacture. This shall include the furnishing of all material and labor required for the replacement of installed material discovered to be defective prior to the final acceptance of the work.

403.1.2 HANDLING OF PIPE MATERIAL

All types of pipe shall be handled in such a manner as will prevent damage to the pipe or coating. Damaged pipe and other accessories shall be rejected and replaced to the satisfaction of the City Engineer. The methods of handling shall be corrected to prevent further damage when called to the attention of the contractor. The pipe and fittings shall be inspected by the contractor for defects while suspended above grade.

Dirt or other foreign material shall be prevented from entering the pipe or pipe joint during handling or laying operations and any pipe or fitting that has been installed with dirt or foreign material in it shall be thoroughly cleaned. At times when pipe laying is not in progress, and at the end of each working day, the open ends of the pipe shall be closed by a water tight plug to ensure absolute cleanliness inside the pipe. The plugs shall not be removed until the trench has been dewatered to the satisfaction of the City Engineer.

403.2 PIPE INSTALLATION

Pipe shall be installed in accordance with ANSI/AWWA Standard C600-99 (or latest edition), except as modified herein.

403.2.1 EXCAVATION AND BACKFILL

Excavation and backfill for water mains shall conform to the provisions of Section 20, 21 and 22 of the Standard Specifications for Water Sewer Main Construction in Illinois, latest edition, except as modified herein.

403.2.2 DEPTH OF PIPE COVER

Unless otherwise shown on the plans or indicated in the Special Provisions, all pipe shall be installed with a minimum of 5 feet of ground cover, measured from the proposed grade to the top of the pipe. In areas subject to subsequent excavation or fill, the mains shall be laid to the grades shown on the plans.

403.2.3 PIPE BEDDING

The trench shall have a flat bottom conforming to the grade to which the pipe is laid. The pipe shall be laid on sound aggregate bedding, no less than 4 inches in depth, true to grade and shall have a firm bearing for the full length of pipe. Any part of the trench excavated below grade shall be corrected with trench backfill material and thoroughly compacted.

403.2.4 DEWATERING OF TRENCH

Where water is encountered in the trench, the water shall be removed during pipe laying and jointing operations. Provisions shall be made to prevent floating of the pipe. Trench water shall not be allowed to enter the pipe at any time.

403.2.5 LAYING OF PIPE ON CURVES

Long radius curves, either horizontal or vertical, may be laid with standard pipe by deflections at the joints. The maximum deflections at pipe joints and laying radius for various pipe lengths are as found in the following standards, but at no time shall the deflection of the pipe joints exceed the manufacturer's maximum recommended deflection:

a) Ductile Iron Pipe Mechanical Joints: AWWA C600-99 (or latest edition)

b) Ductile Iron Pipe Push-On Joints: AWWA C600-99 (or latest edition)

Where field conditions require deflection of pipe not shown on the plans, the City Engineer must give prior approval of the methods to be used.

403.2.6 MECHANICAL JOINTS

a) Jointing procedures shall be in accordance with AWWA C600-99 (or latest edition). The outside of the spigot and the inside of the bell shall be cleaned. Lubrication and additional cleaning shall be provided by brushing both the gasket and plain end with an approved pipe lubricant meeting the requirements of ANSI/AWWA C111/A21.11-00 (or latest edition) just prior to slipping gasket onto the plain end for joint assembly. The gland shall be placed on the plain end with the lip extension toward the plain end, followed by the gasket with the narrow edge of the gasket toward the plain end.

b) The pipe shall be inserted into the socket and the gasket shall be pressed firmly and evenly into the gasket recess. The joint shall be kept straight during assembly.

c) The gland shall be pushed toward the socket and centered around the pipe with the gland lip against the gasket. The bolts shall be inserted and the nuts hand tightened.

d) The bolts shall be tightened to the normal range of bolt torque as specified in AWWA C600-99 (or latest edition) which is 75-90 ft-lbs for pipes 4 inches to 24 inches, while at all times maintaining approximately the same distance between the gland and the face of the flange at all points around the socket.

e) Nuts spaced 180 degrees shall be tightened alternately in order to produce an equal pressure on all parts of the gland.

403.2.7 PUSH-ON JOINTS

a) Jointing procedures shall be in accordance with AWWA C600-99 (or latest edition). The inside of the bell shall be thoroughly cleaned to remove all foreign matter from the joint. The circular rubber gasket shall be inserted in the gasket seat provided.

b) A thin film of approved gasket lubricant shall be applied to the inside surface of the gasket. Gasket lubricant shall be a solution of vegetable soap or other solution supplied by the pipe manufacturer and approved by the City Engineer. The lubricant shall be approved for use with potable water. The spigot end of the pipe shall be cleaned and entered into the rubber gasket in the bell, using care to keep the joint from contacting the ground. The joint shall then be completed by forcing the plain end to the seat of the bell. Care must be taken not to damage exterior coating or interior linings while forcing the joint. A timber header or other suitable means shall be used to push the pipe "home" to avoid damage.

c) Field-cut pipe lengths shall be beveled to avoid damage to the gasket and facilitate making the joint.

d) All pipe shall be furnished with a depth mark to assure that the spigot end is inserted to the full depth of the joint.

403.2.8 INSTALLING PIPE THROUGH CASINGS

This work shall be in conformance with Section 20-2.19 of the Standard Specifications for Water and Sewer Main Construction in Illinois, except as modified herein. Encasements for pipes under highways or railroads shall conform to the requirements of the City of Naperville, or the owner of the highway or railroad. Manufactured non-metallic or non-corrosive casing spacers, adjustable runners, or cradles shall be used to support the pipe in the casing and shall be installed per manufacturer's recommendations. A minimum of two supports shall be used per joint of pipe for lengths up to 12-1/2 feet, and a minimum of three supports shall be used per joint for lengths greater than 12-1/2 feet. The annular space shall be filled with pea gravel, low-strength grout, or cellular foam concrete and provisions shall be made so that no voids are left. The Contractor shall make arrangements to have a City of Naperville representative witness the annular spacing filling operations.

403.2.9 CORROSION PROTECTION - POLYETHYLENE ENCASEMENT

Polyethylene encasement is required for all underground installations of gray, ductile and cast iron pipe and other related appurtenances or water main. Polyethylene encasement shall be required unless a soils report submitted to the City by the Ductile Iron Pipe Research Association indicates that the soils in the area are not corrosive to iron pipe. Should corrosive soils be encountered during the installation of the pipe, then the pipe shall be encased in polyethylene wrap.

Installation shall be in accordance with ANSI/AWWA C105/A21.5-99 (or latest edition). The polyethylene encasement shall prevent contact between the pipe and the surrounding backfill and bedding material but is not intended to be a completely air and water tight enclosure.

Overlaps shall be secured by the use of approved adhesive tape, plastic string, or other material capable of holding the polyethylene encasement in place until backfilling operations are completed.

Three different methods for the installation of polyethylene encasement on pipe are acceptable. Methods A and B are for use with polyethylene tubes and method C for use with polyethylene sheets.

a) Method A
Cut the polyethylene tube to a length approximately two feet longer than that of the pipe section. Slip the tube around the pipe, centering it to provide a one foot overlap on each adjacent pipe section, and bunching it accordion fashion length-wise until it clears the pipe ends.

Lower the pipe into the trench and make up the pipe joint with the preceding section of pipe. A shallow bell hole must be made at joints to facilitate installation to the polyethylene tube.

After assembling the pipe joint, make the overlap of the polyethylene tube. Pull the bunched polyethylene from the preceding length of pipe, slip it over the end of the new length of pipe and secure in place. Then slip the end of the polyethylene from the new pipe section over the end of the first wrap until it overlaps the joint at the end of the preceding length of pipe.

Secure the overlap in place. Take up the slack width to make a snug, but not tight, fit along the barrel of the pipe, securing the fold at quarter points.

Repair any rips, punctures, or other damage to the polyethylene with adhesive tape or with a short length of polyethylene tube cut open, wrapped around the pipe and secured in place. Proceed with installation of the next section of pipe in the same manner.

b) Method B
Cut the polyethylene tube to a length approximately one foot shorter than that of the pipe section. Slip the tube around the pipe, centering it to provide six inches of bare pipe at each end. Make the polyethylene snug, but not tight; secure ends as described in Method A.

Before making up a joint, slip a three foot length of polyethylene tube over the end of the preceding pipe section, bunching it accordion fashion lengthwise. After completing the joint, pull the three foot length of polyethylene over the joint, overlapping the polyethylene previously installed on each adjacent section of pipe by at least one foot. Make the polyethylene snug and secure each end as described in Method A.

Repair any rips, punctures, or other damage to the polyethylene. Proceed with installation of the next section of pipe in the same manner.

c) Method C
Cut the polyethylene sheet to a length approximately two feet longer than that of the pipe section. Center the cut length to provide a one foot overlap on each adjacent pipe section, bunching it until it clears the pipe ends. Wrap the polyethylene around the pipe so that it circumventially overlaps the top quadrant of the pipe. Secure the cut edge of polyethylene sheet at intervals of approximately three feet.

Lower the wrapped pipe into the trench and create the pipe joint with the preceding section of pipe. A shallow bell hole must be made at joints to facilitate installation of the polyethylene. After completing the joint, make the overlap as described above.

Repair any rips, punctures or other damage to the polyethylene. Proceed with installation of the next section in the same manner.

Cover bends, reducers, offsets, and other pipe-shaped appurtenances with polyethylene in the same manner as the pipe. When valves, tees, crosses, and other odd-shaped pieces cannot be wrapped practically in a tube, wrap with a flat sheet or split length of polyethylene tube by passing the sheet under the appurtenance and bringing it up around the body. Make seams by bringing the edges together, folding over twice, and taping down. Handle width and overlaps at joints as described above. Tape polyethylene securely in place at valve stem and other penetrations.

403.3 VALVES
The minimum requirements for all valves shall, in design, material and workmanship, conform to AWWA C509-01 or AWWA C515-01 (or latest editions).

All valves shall be inspected upon delivery in the field to insure proper working order before installation. They shall be set and jointed to the pipe in the manner as set forth in the AWWA Standards for the type of connection ends furnished.

The valves shall be suitable for ordinary water works service and intended to be installed in a normal position on buried pipe lines or water distribution systems.

All valves shall be provided with a standard valve chamber so arranged that no shock will be transmitted to the valve and the box or vault opening shall be centered over the operation nut, and the cast iron cover shall be set flush with the road bed or finished surface.

403.4 TAPPING AND LINE STOP SLEEVES
Pressure tap connections shall be made in accordance with Standard Details and in accordance with Section 46 of the Standard Specifications for Water and Sewer Main Construction in Illinois.

Tapping sleeves of stainless steel shall not be used for “size on size” installations nor on water mains larger than 12 inches in size.

The outside surface of the existing main and the inner face of the tapping sleeve shall be disinfected with a 1 % chlorine solution.

403.5 INSERT VALVES

Insert valves shall be furnished with flanged inlet and connections having a machined projection on the flanges to mate with a machined recess on the outlet flanges of the tapping sleeves and crosses.

Insert valves shall be furnished for and installed in a horizontal conduit with the valve stem plumb over the center line of the pipe.

403.6 CURB BOXES

Curb boxes shall be capable of extensions and installed to finished grade, and shall conform to the depth of bury of the service line as provided in the Naperville Standard Detail 490.20. "Pigtails" on customer side of curb stop are not allowed.

403.7 VALVE BOXES

Adjustable cast iron valve boxes shall be set to position during backfilling operations so they will be in a vertical alignment to the valve operating stem. The lower casting of the unit shall be installed first in such a manner as to be cushioned and to not rest directly upon the body of the R/W valve or upon the water main. The upper casting of the unit shall then be placed in proper alignment into such an elevation that its top will be at final grade. Backfilling around both units shall be placed and compacted to the satisfaction of the Engineer. Valve boxes must be free of debris, centered over operating nut and easily key-able.

403.8 VALVE VAULTS

Seal tight valve vaults shall be pre-cast with a minimum diameter of 48 inches. For valves 12 inches and smaller, a concentric cone centered on the valve shall be provided. On butterfly valves and pressure connections, vaults shall be a minimum of 60 inches with eccentric cones installed so that the opening of the cone is placed as close to the centerline of the operation as possible.

A butyl mastic material (CONSEAL CS-102B or equal approved by the City Engineer) shall be used to provide a watertight seal between vault barrel sections, cone to barrel section, and the cone section to the adjusting ring or the frame.

Rubber boots/seals must be used where pipes enter manholes to provide a watertight connection where pipe enters. Elastomeric boots shall conform to ASTM C923-02 and ASTM A167-99(2004), or latest edition with stainless steel bands as manufactured by KOR-N-SEAL by NPC, PSX by Press-Seal Gasket Corporation or approved equal.

403.8.1 FRAME ADJUSTMENTS

Adjustments may be necessary to ensure that frames match the elevation of the surrounding pavement or ground surface. Preformed adjusting rings of the proper dimensions needed to

mate the frame to the precast structure shall be used. No more than 12 inches of vertical adjustment may be made using the minimum practical number of individual rings.

All rings shall be High Density Polyethylene Plastic (HDPE), Recycled Rubber, High Density Expanding Polystyrene, Expanded Polypropylene (EPP), or other material as approved by the City Engineer. Precast concrete rings, bricks, rocks, shims, or concrete blocks will not be allowed. Tapered adjusting rings shall be required when the frame will need to match the slope of the roadway.

A resilient, flexible, non-hardening, preformed bituminous mastic material, Conseal 102 B or approved equal, shall be used between the cone or top barrel section of the structure and the adjusting rings. A thick bead of non-hardening elastomeric joint sealant conforming to ASTM C-920, Type S, Grade NS, shall be applied between all individual rings, and between the adjusting rings and the frame. The sealant or mastic material shall be applied in such a manner that no surface water or ground water inflow can enter the structure. No dressing or tuckpointing mortar is allowed on the rings.

Frame adjustments shall be completed in accordance with Sections 602 and 603 of Standard Specifications for Road and Bridge Construction, prepared by the Illinois Department of Transportation, latest edition, except as noted herein.

403.9 FIRE HYDRANTS

These specifications are to be used in conjunction with the AWWA Standard C502-05 (or latest edition) for fire hydrants for ordinary water works service. Fire hydrants shall be installed at the locations shown on the approved engineering plans.

Hydrants shall be plumb and shall be set so that the center of the hydrant port is a minimum of 18 inches to a maximum of 24 inches above the surrounding finished grade ensuring the breakaway flange at proper ground height. All hydrants shall be inspected in the field upon delivery to the job to ensure proper operation before installation. A minimum of 1/4 cubic yard of washed coarse stone shall be placed at and around the base of the hydrant to ensure proper drainage of the hydrant after use. The blocking of the hydrant shall consist of a wedge of Portland cement concrete of not less than 1/4 cubic yard extending from the hydrant to undisturbed soil and shall be so placed to form a barrier adjacent to the hydrant base top to counteract the pressure of water exerted thereon. Care shall be taken to insure that weep holes are not covered by concrete. The hydrant shall be set on a concrete block to ensure a firm bearing for the hydrant base. The hydrant valve and tee shall be interconnected by stainless steel rods or approved retainer glands. Locking or restrained fittings may be substituted only after prior approval from the City Engineer. The resetting of existing hydrants and moving and reconnection of existing hydrants shall be handled in a manner similar to the new installation. Auxiliary valve shall be installed a minimum of 18 inches from the face of the hydrant. The contractor shall rotate and/or adjust the hydrants to the satisfaction of the department of Public Utilities. The hydrant settings shall follow the Naperville Standard Detail 490.06.

Fire hydrant should be bagged "NOT IN SERVICE" until all testing and disinfection has been completed and the new water main section is service.

403.10 THRUST BLOCKING AND TIE RODS

a) Blocking to prevent movement of lines under pressure at bends, tees, caps, valves (including inside vaults) and hydrants shall be Portland cement concrete, a minimum of 12 inches thick, placed between solid ground and the fittings (see Naperville Standard Detail 490.11) and shall be anchored in such a manner that pipe and fitting joints will be accessible for repairs. The Portland cement concrete shall meet or exceed a compressive strength of 3500 psi after 28 days.

b) All bends of 11-l/4 degrees or greater, and all tees, crosses and plugs shall be thrust protected to prevent movement of the lines under pressure as shown on the plans.

c) Where unstable soil and/or backfill conditions exist, it may be necessary to install thrust blocking at deflected sections as well as at fittings. If required by the City Engineer, deflection blocking shall be installed at a point approximately 1/5th of the pipe length each side of the coupling. Couplings/sleeves shall be restrained with approved retainer glands.

d) Tie rods shall be 5/8 inch diameter (minimum) stainless steel, grade 304. Eyebolts shall be high strength, low alloy steel.

e) Where conditions prevent the use of concrete thrust blocks, tied joints or restrained joints of a type approved by the City Engineer shall be used.

403.11 RETAINER GLANDS

The contractor may elect to use mechanical joint wedge action retainer glands in lieu of tie-rods. Installation shall be per manufacturers' recommended procedures, including length and/or number of joints to be restrained. Tied or restrained joints shall extend a minimum of two full pipe lengths back from the fitting.

Note: Thrust blocking shall be required behind fire hydrant assemblies in addition to the use of retainer glands and/or tie rods. The use of set screw type retainer glands shall not be permitted for use within the City of Naperville.

Use of approved retainer glands does not eliminate the need for thrust blocking at fittings and valves unless approved by the Department of Public Utilities after review of the appropriate supporting calculations.

404 INSPECTION AND TESTING

404.1 GENERAL INFORMATION

When extending an existing line, the contractor must chlorinate and pressure test both new and valved sections of existing lines in accordance with City standards.

For fire lines to buildings, the permanent valve must be in place prior to disinfection and sampling.

404.2 TESTING FOR TAPPING SLEEVES AND INSERT VALVES

Before a tapping sleeve is installed, the exterior of the main to be tapped, as well as the interior surface of the sleeve, shall be thoroughly cleaned and swabbed with a 1 percent hypochlorite solution.

After the surface disinfection, the tapping saddle or sleeve shall be mounted to the main and tapping valve to form a pressure-tight connection. The installation shall be pressure tested at operating pressure plus 50 percent, to insure the integrity of the installation. This shall be a hydrostatic test, introduced through a port on the tapping machine, or through a tapped mechanical joint plug on the outlet side of the tapping valve. The tapping machine and the tapping valve and sleeve assembly shall be externally supported so that no additional weight is placed upon the main(s).

Prior to installation, the insert valve shall be operated in the position that it will assume in service and for the full length of gate travel in both directions to demonstrate the free and perfect functioning of all parts in the intended manner. Any defects of workmanship shall be corrected and tested repeated until satisfactory performance is demonstrated.

404.3 PRESSURE TESTING

All newly laid water mains shall be subjected to a hydrostatic pressure test. Testing shall be in accordance with provision AWWA C-600-99 (or latest edition). Each valved section of pipe shall be slowly filled with water and flushed. The specified test pressure shall be applied by means of a pump connected to the pipe in a satisfactory manner. Water used shall be metered. The pump to pipe connection and all necessary apparatus including gauges and meters shall be furnished by the contractor. Before applying the specified test pressure, all air shall be expelled from the pipe. To accomplish this, taps shall be made, if necessary, at points of highest elevation and afterwards turned off and capped. All joints showing visible leaks shall be repaired or replaced until they are free from leaks. Any cracked or defective pipes, fittings, valves, or hydrants discovered in consequence of this pressure test shall be removed and replaced by the contractor with sound material and the test shall be repeated until satisfactory to the City Engineer. In no instance shall "Bell Joint Clamps" be permitted to repair leaks at push-on Joints.

a) The newly laid water mains or any valved sections of it shall be subjected to a hydrostatic pressure test of no less than 150 pounds per square inch (psi) or 50% more than the operating pressure, whichever is greater. The test pressure shall not vary by more than $\pm$ 5 psi.

b) The duration of each pressure test shall be for a period of not less than 4 hours.

c) The pressure test gauge shall be glycerin or oil filled, with a range of not more than 200 psi and increments not greater than 5 psi.

404.3.1 PERMISSIBLE LEAKAGE

a) Suitable means approved by the City Engineer shall be provided by the contractor for determining the quantity of water lost by leakage. The leakage test shall be conducted after satisfactory completion of the pressure test before being accepted.

b) Allowable leakage shall not be greater than that indicated in Table 400-3.

c) Leakage is defined as the quantity of water to be supplied in the newly laid pipe or any valved section under test which is necessary to maintain the specified leakage test pressure after the pipe has been filled with water and the air expelled.

d) Flanged pipes shall be watertight.

TABLE 400-3
ALLOWABLE LEAKAGE FOR HYDROSTATIC PRESSURE TEST (150 PSI)

Nominal Pipe Diameter	Allowable Leakage (gallons/hour/1000 LF)
2”	0.19
3”	0.28
4”	0.37
6”	0.55
8”	0.74
10”	0.92
12”	1.10
14”	1.29
16”	1.47
18”	1.66
20”	1.84
24”	2.21

404.4 DISINFECTION (CHLORINATION)

404.4.1 FLUSHING

a) Sections of pipe to be disinfected shall first be flushed to remove any solids or contaminated material that may have become lodged in the pipe. If no hydrant is

installed at the end of the main, then a tap should be provided large enough to develop a velocity of at least 2.5 feet per second in the main. One 2-1/2 inch diameter hydrant opening will, under normal pressure, provide this velocity in pipe sizes up to and including 12 inches. See Table 400-4 for additional sizes.

b) All taps required by the contractor for chlorination or flushing purposes or for temporary or permanent release of air, shall be provided by him as part of the construction of water mains. When completed, the copper tubing shall be removed and the corporation stop placed at the "off" position. After testing, all corporation stops in valve vaults shall be brass-capped to protect threads.

TABLE 400-4
MINIMUM ORIFICE SIZE (INCHES) TO
FLUSH WATER MAIN AT 2.5 FPS

Pipe Diameter	Residual Pressure, PSI				
	20	40	60	80	100
4”	1.11	0.94	0.85	0.79	0.75
6”	1.64	1.38	1.24	1.16	1.09
8”	2.23	1.88	1.69	1.58	1.49
10”	2.75	2.31	2.09	1.94	1.84
12”	3.34	2.81	2.54	2.37	2.24
14”	3.86	3.25	2.94	2.73	2.58
16”	4.31	3.63	3.28	3.05	2.88
18”	4.98	4.19	3.78	3.52	3.33
20”	5.53	4.65	4.20	3.91	3.70

NOTE: Standard hydrant nozzle sizes are 2.5 inch and 4.5 inch

404.4.2 DISINFECTION REQUIREMENTS

a) Before being placed into service, all new water mains and/or extensions to existing mains shall be chlorinated so that an initial chlorine residual of at least 50 ppm is present, and that a chlorine residual of not less than 25 ppm remains in the water after standing 24 hours in the pipe.

b) For extensions and/or connections equal to or less than one pipe length (< 18 ft), the new pipe, fittings and valve(s) required for the connection/extension may be spray or swab disinfected with a minimum 1 percent hypochlorite solution just prior to being installed.

c) Before a tapping sleeve is installed, the exterior of the main to be tapped, as well as the interior surface of the sleeve, shall be thoroughly cleaned and swabbed with a 1 percent hypochlorite solution.

d) Fire service lines requiring disinfection shall have the permanent position indicating valve (OS&Y or approved equal) installed on the fire sprinkler riser prior to disinfection.

404.4.3 FORM OF APPLIED CHLORINE

Chlorine shall be applied by one of the methods which follow, subject to approval by the City Engineer.

a) Liquid Chlorine - A chlorine gas-water mixture shall be applied by means of a solution-feed chlorinating device or the dry gas may be fed directly through proper devices for regulating the rate of flow and providing effective diffusion of the gas into the water within the pipe being treated. Chlorinating devices for feeding solutions of chlorine gas or the gas itself must provide means for preventing the back flow of water into the chlorine cylinder.

b) Chlorine-Bearing Compounds in Water - In certain instances, when the usage of chlorine gas is not practical, such as in congested or confined areas, upon approval of the City Engineer, a chlorine bearing compound of known chlorine content, prepared in solution form, may be substituted for chlorine gas.

404.4.4 POINT AND RATE OF APPLICATION

a) Point of application - The preferred point of application of the chlorinating agent is at the beginning of the pipeline extension or any valved section of it, and through a corporation stop inserted in the pipe. The water injector for delivering the chlorine-bearing water into the pipe should be supplied from a tap made on the pressure side of the gate valve controlling the flow into the pipe line extension. Alternate points of application may be used when approved or directed by the City Engineer.

b) Rate of Application - Water from the existing distribution system, or other approved source of supply shall be controlled to flow very slowly into the newly laid pipeline during the application of the chlorine. The rate of chlorine mixture flow shall be a constant feed and in such proportion to the rate of water entering the newly laid pipe that the dosage applied to the water will be at least 50 parts per million unless otherwise directed by the City Engineer.

c) Retention Period - Treated water shall be retained in the pipe at least 24 hours. After this period, the chlorine residual at pipe extremities and at other representative points shall be at least 25 parts per million.

d) Chlorinating Valves and Hydrants - After the process of chlorinating newly laid pipe, all valves internal to the isolated test section and other appurtenances shall be operated while the pipeline is filled with the chlorinating agent and under normal operating pressure.

e) Preventing Reverse Flow - Valves shall be manipulated so that the strong chlorine solution in the line being treated will not flow back into the existing distribution system supplying the water. Backflow valves are required on chorine equipment piping.

404.5 FINAL FLUSHING AND TESTING

a) Dechlorination/neutralization may be required by the City Engineer. The environment into which the chlorinated water is to be discharged shall be inspected. If there is any possibility that the chlorinated discharge will cause environmental damage, then a neutralizing chemical shall be added to the discharge water to thoroughly neutralize the chlorine residual remaining in the water (see AWWA C651-05, or latest edition, Appendix B).

b) Following chlorination, all treated water shall be thoroughly flushed from the newly laid pipe at its extremity until the replacement water throughout its length shows, upon test, a residual not in excess of that carried in the source of supply.

c) After flushing, water samples collected on 2 successive work days from the treated piping system, as directed by the City Engineer, shall show satisfactory bacteriological results. Water main shall not be flushed to obtain the second day sample. Bacteriological analysis must be performed by a laboratory approved by the Director of the Illinois Department of Public Health and the City Engineer. A minimum of two samples is required. The actual number of samples will be determined by the City Engineer.

d) Should the initial treatment result in an unsatisfactory bacterial test, the original chlorination procedure shall be repeated by the contractor until satisfactory results are obtained.

e) Naperville Department of Public Utilities must be notified at least 48 hours prior to flushing. New water mains, including pressure tap valves, connected to an existing water main, and existing water main valves shall only be operated by Naperville Department of Public Utilities personnel.

490 STANDARD DETAILS

490.01 Valve Vault
490.02 Valve Vault with Cast/Ductile Iron Sleeve Pressure Tap
490.03 Valve Vault with Stainless Steel Sleeve Pressure Tap
490.04 Valve Vault Frame & Cover
490.05 Valve Box
490.06 Hydrant

490.10 Water Main Trench Section
490.11 Thrust Block
490.12 Pipe Insulation
490.13 Lowering/Adjusting Water Main
490.14 Water Main Protection from Existing Storm Sewer Pipe
490.15 Polyethylene Encasement
490.16 Water Main Casing Pipe
490.17 Line Stop Tapping Sleeve

490.20 Service Tap and Connection

490.99 COMMON NAMES
All standard details in this section may be referred to by a common name in associated construction documents. The common name shall be "WATER xx" where the xx is the section of the detail number to the right of the decimal point. For instance, *Detail #490.06 Hydrant* may also be referred to as "WATER 6".

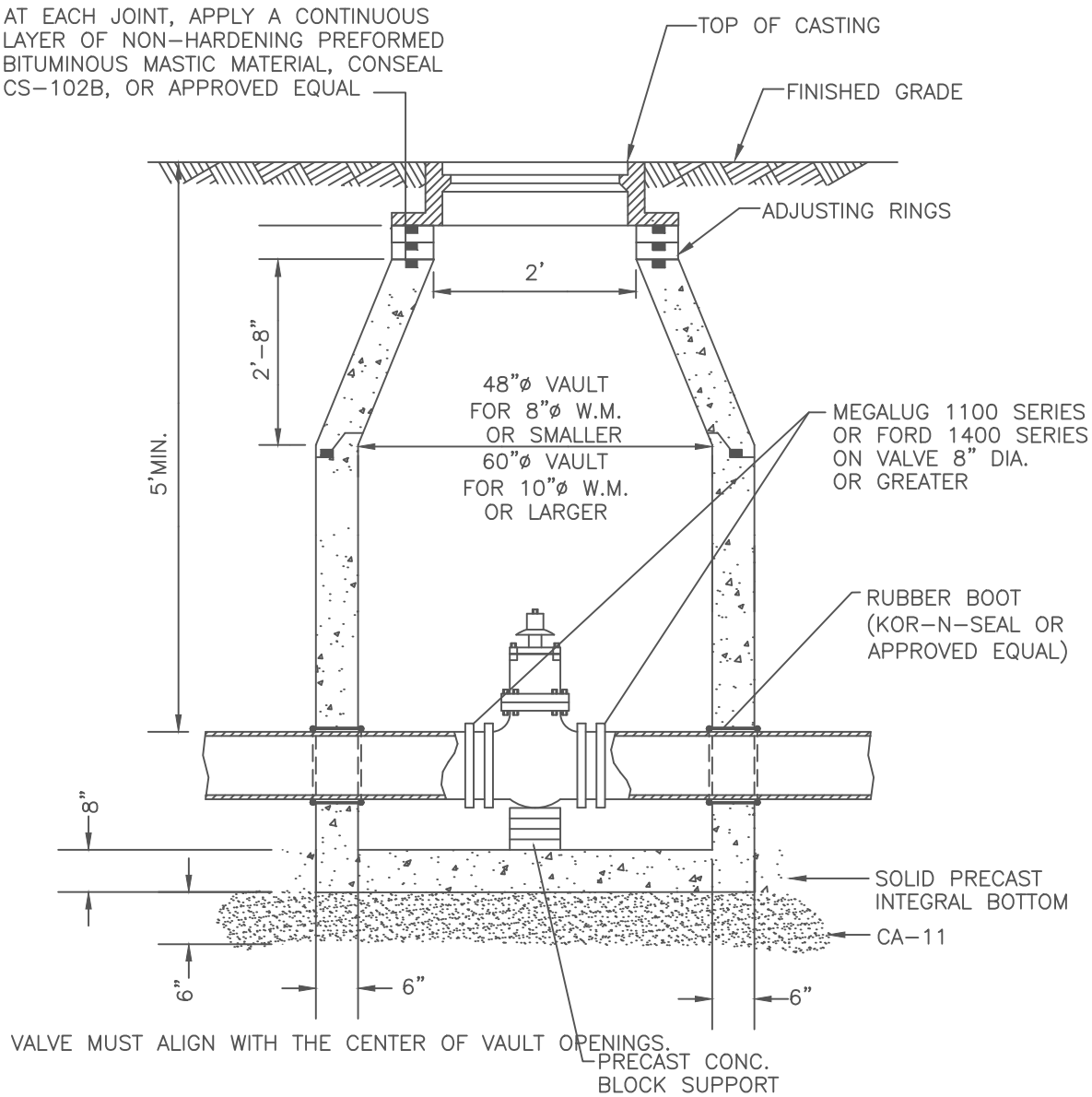

1. VALVE MUST ALIGN WITH THE CENTER OF VAULT OPENINGS.
2. CONCENTRIC CONES TO BE USED FOR VALVES 12" AND SMALLER.
3. VALVES SHALL BE RESILIENT WEDGE GATE VALVES WITH MECHANICAL JOINT ENDS TO COMPLY WITH ANSI/AWWA C515-09 OR LATEST VERSION VALVES TO BE CLOW, AMERICAN, WATEROUS, KENNEDY OR APPROVED EQUAL.
4. WHEN ADJUSTMENTS ARE NECESSARY, THEY SHALL BE PERFORMED WITH A MAXIMUM OF TWO (2) PRECAST CONCRETE RINGS SET IN A BED OF PREFORMED NON-HARDENING MASTIC MATERIAL (CONSEAL CS-102B, OR APPROVED EQUAL) TO A MAXIMUM HEIGHT OF 12".

City of Naperville STANDARD DETAIL	VALVE VAULT	WATER 1
	EFFECTIVE: 7/17/2020 — SHEET 1 OF 1	490.01

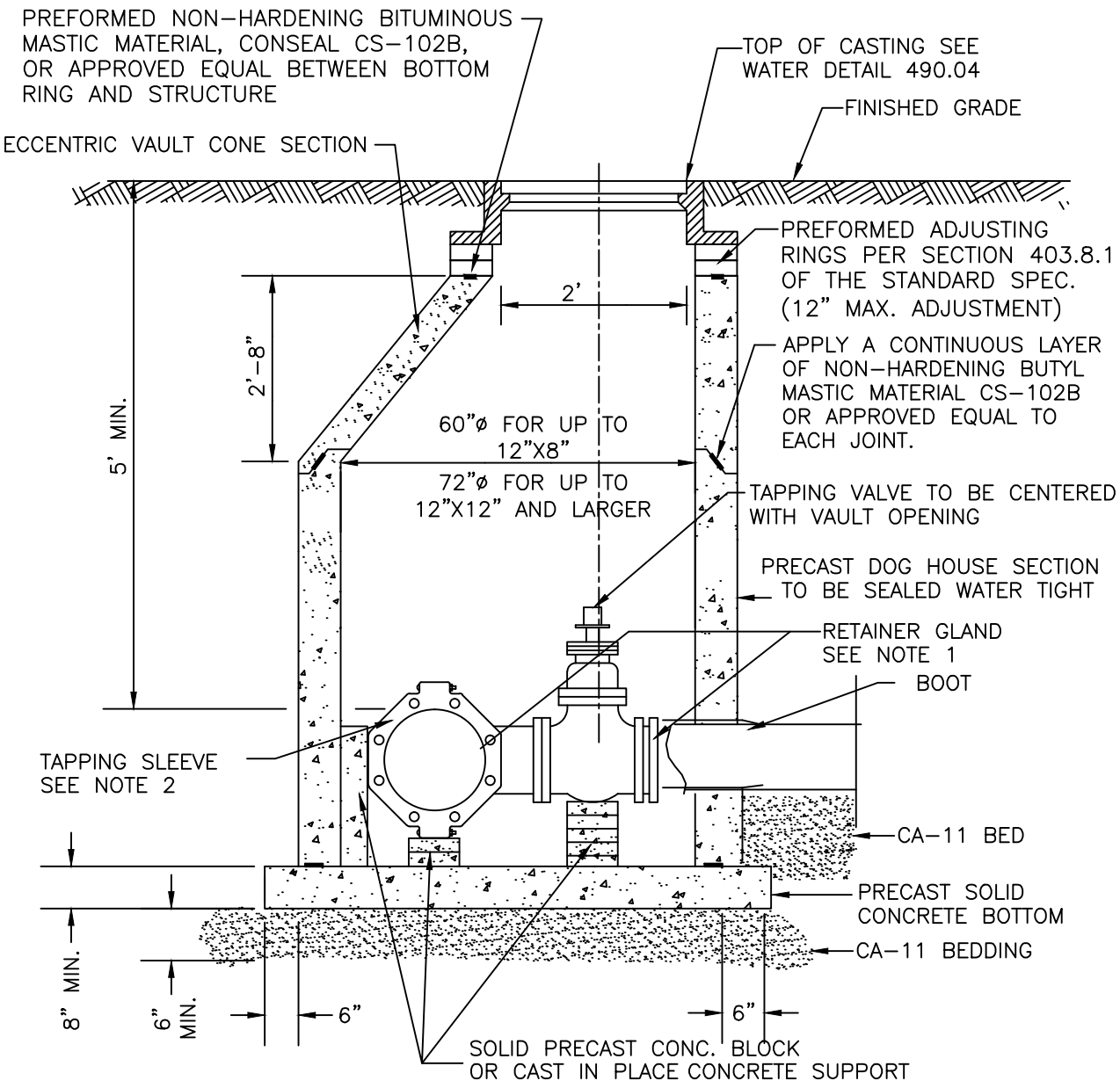

1.) USE MEGALUG SERIES 1100 OR FORD UNI-FLANGE SERIES 1400 RETAINER GLANDS WITH STAINLESS STEEL T-BOLTS COATED WITH ANTI-SIEZE COMPOUND.

2) TAPPING SLEEVES SHALL BE CAST OR DUCTILE IRON MECHANICAL JOINT CONFORMING TO ANSI/AWWA C110/A21.10-82 (TYLER/UNION OR APPROVED EQUAL). EXISTING PIPE TO BE DISINFECTED PRIOR TO INSTALLATION OF TAPPING SLEEVE. TAPPING SLEEVE TO BE PRESSURE TESTED HYDROSTATICALLY TO OPERATING PRESSURE PLUS 50 PERCENT PRIOR TO MAKING PRESSURE CONNECTION.

3) EXISTING PIPE TO BE DISINFECTED PRIOR TO INSTALLATION OF TAPPING SLEEVE AND TAPPING SLEEVE IS TO BE PRESSURE TESTED TO OPERATING PRESSURE PLUS 50 PERCENT PRIOR TO MAKING PRESSURE CONNECTION.

4) DO NOT USE STAINLESS STEEL SLEEVE ON SIZE TAPS OR PIPES LARGER THAN 12" DIAMETER

5) IN THE EVENT IT IS NECESSARY TO USE A PRECAST SPLIT BOTTOM FLOOR DUE TO SPACE CONSTRAINTS THE FLOOR MUST BE GROUTED WATER TIGHT.

6) TAPPING VALVES SHALL CONFORM TO C515-09 OR LATEST REVISION: AMERICAN SERIES 2500 RESILIENT WEDGE TAPPING VALVES WITH FLANGED X MECHANICAL JOINT ENDS OR APPROVED EQUAL.

City of Naperville **STANDARD DETAIL**	**VALVE VAULT WITH CAST/DUCTILE IRON SLEEVE PRESSURE TAP** REVISED: 01/01/2013 — SHEET 1 OF 1	WATER 2 **490.02**

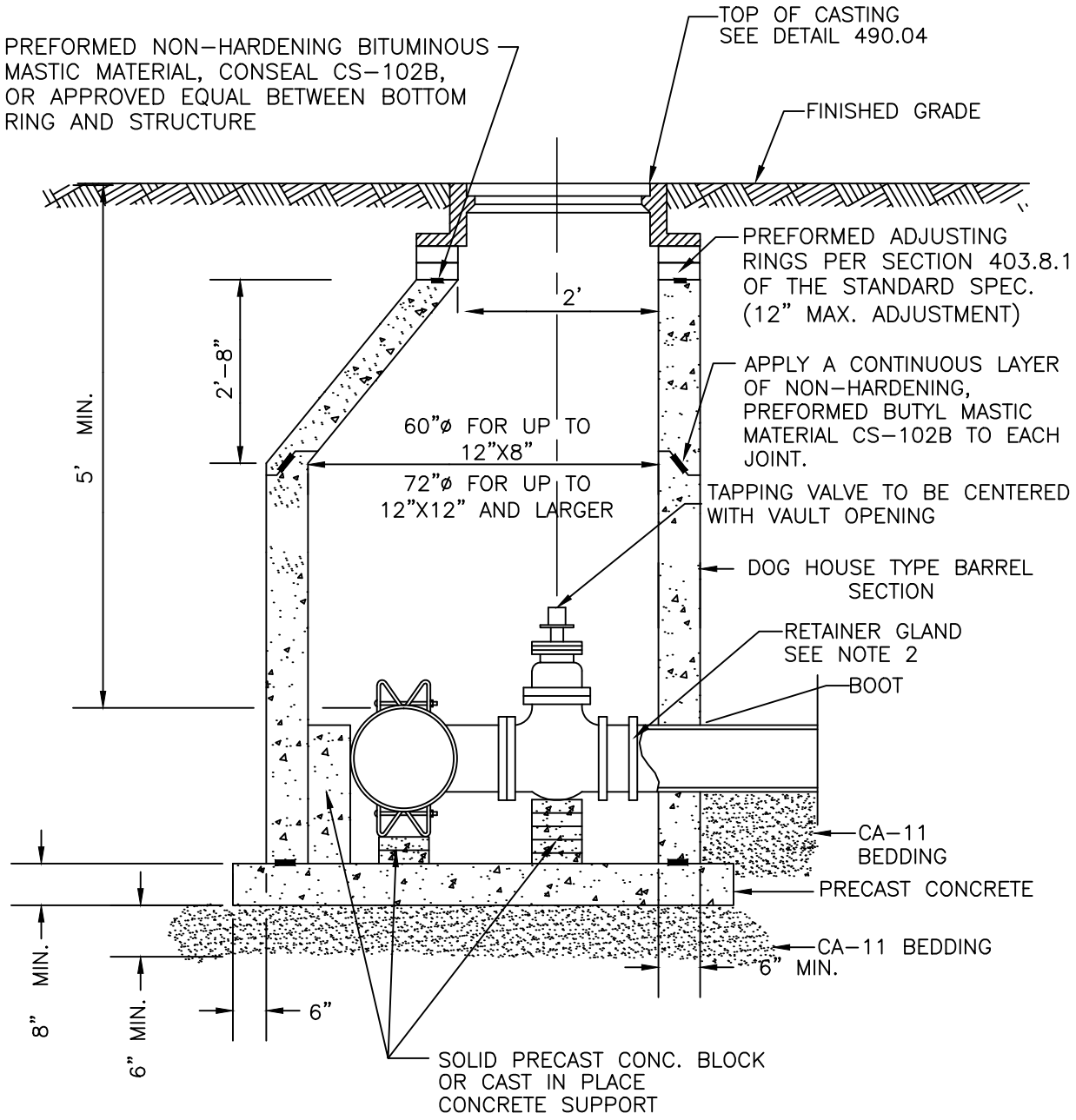

1. USE MEGALUG SERIES 1100 OR FORD UNI-FLANGE SERIES 1400 RETAINER GLANDS WITH STAINLESS STEEL T-BOLTS COATED WITH ANTI-SIEZE COMPOUND.
2. TAPPING SLEEVES SHALL BE HEAVY DUTY STAINLESS STEEL WITH STAINLESS STEEL BOLTS AND NUTS (ROMAC INDUSTRIES SST III, CASCADE CST-EX, FORD FTSS).
3. EXISTING PIPE TO BE DISINFECTED PRIOR TO INSTALLATION OF TAPPING SLEEVE AND TAPPING SLEEVE IS TO BE PRESSURE TESTED TO OPERATING PRESSURE PLUS 50 PERCENT PRIOR TO MAKING PRESSURE CONNECTION.
4. DO NOT USE STAINLESS STEEL SLEEVE ON SIZE ON SIZE TAPS OR PIPES LARGER THAN 12" DIAMETER.
5. IN THE EVENT IT IS NECESSARY TO USE A PRECAST SPLIT BOTTOM FLOOR DUE TO SPACE CONSTRAINTS THE FLOOR MUST BE GROUTED WATER TIGHT.
6. TAPPING VALVES SHALL CONFORM TO C515-09: AMERICAN SERIES 2500 RESILIENT WEDGE TAPPING VALVES WITH FLANGED X MECHANICAL JOINT ENDS OR APPROVED EQUAL.

City of Naperville **STANDARD DETAIL**	**VALVE VAULT WITH STAINLESS STEEL SLEEVE PRESSURE TAP** REVISED: 01/01/2013 — SHEET 1 OF 1	WATER 3 490.03

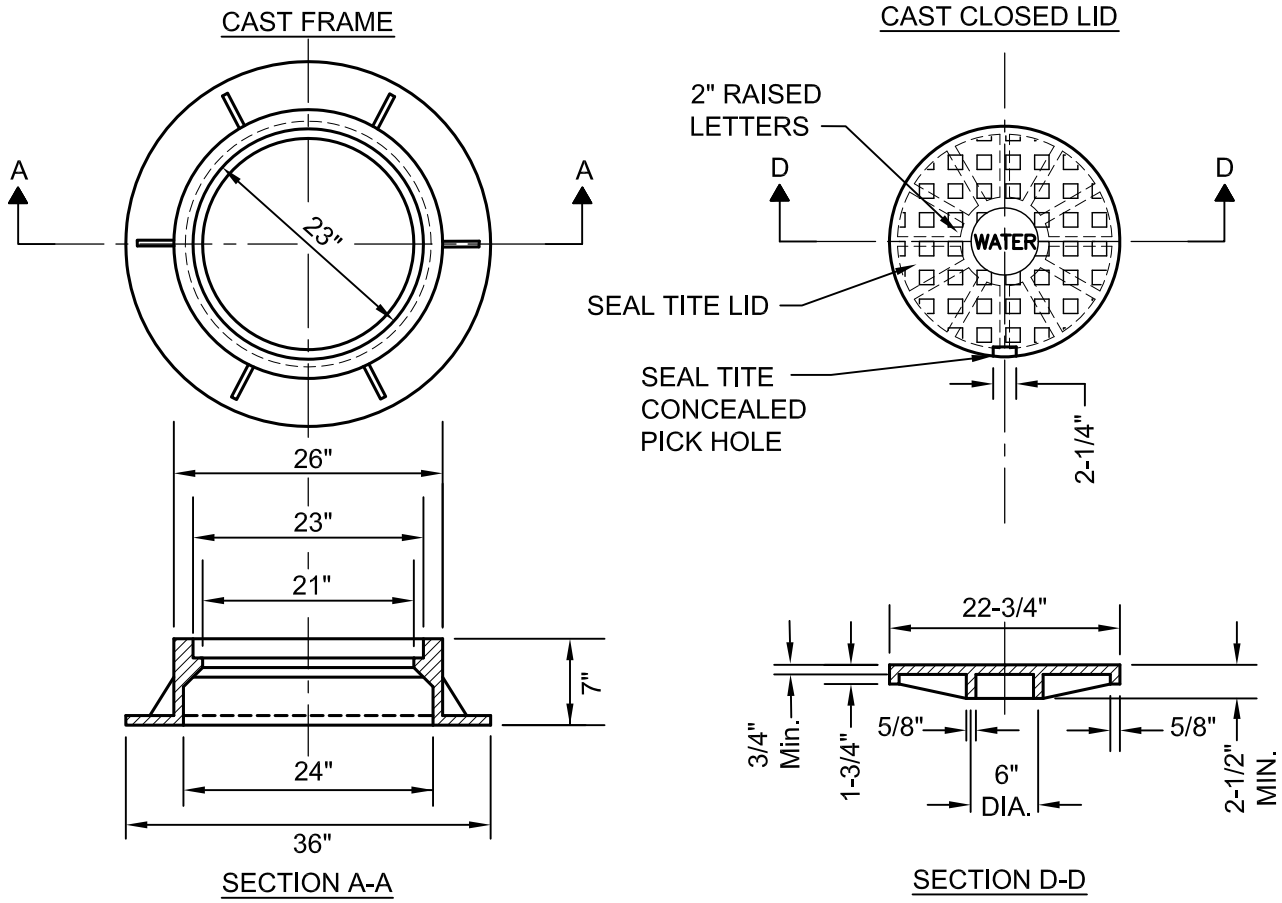

NOTES:

1. DUCTILE IRON SHALL BE GRADE 65-45-12 AND SHALL BE TESTED IN ACCORDANCE WITH FEDERAL SPECIFICATIONS.
2. ALL FRAMES AND COVERS SHALL HAVE MACHINED HORIZONTAL AND VERTICAL BEARING SURFACES. PICK HOLES SHALL NOT CREATE OPENINGS IN THE COVER.
3. THE MANHOLE COVERS SHALL HAVE RAISED LETTERS AS SHOWN.
4. ALTERNATIVE TO DUCTILE IRON LID, GREY IRON CL 35 LID MAY BE USED.
5. DIMENSIONS FOR CASTINGS ARE COMPARABLE TO EAST JORDAN 1022 OR NEENAH R-1772-C, HEAVY DUTY.
6. LIDS AND FRAMES TO MEET AASHTO M306 PROOF LOADING SPECIFICATIONS.

City of Naperville STANDARD DETAIL	VALVE VAULT - FRAME & COVER REVISED: 01/01/2013 — SHEET 1 OF 1	WATER 4 490.04

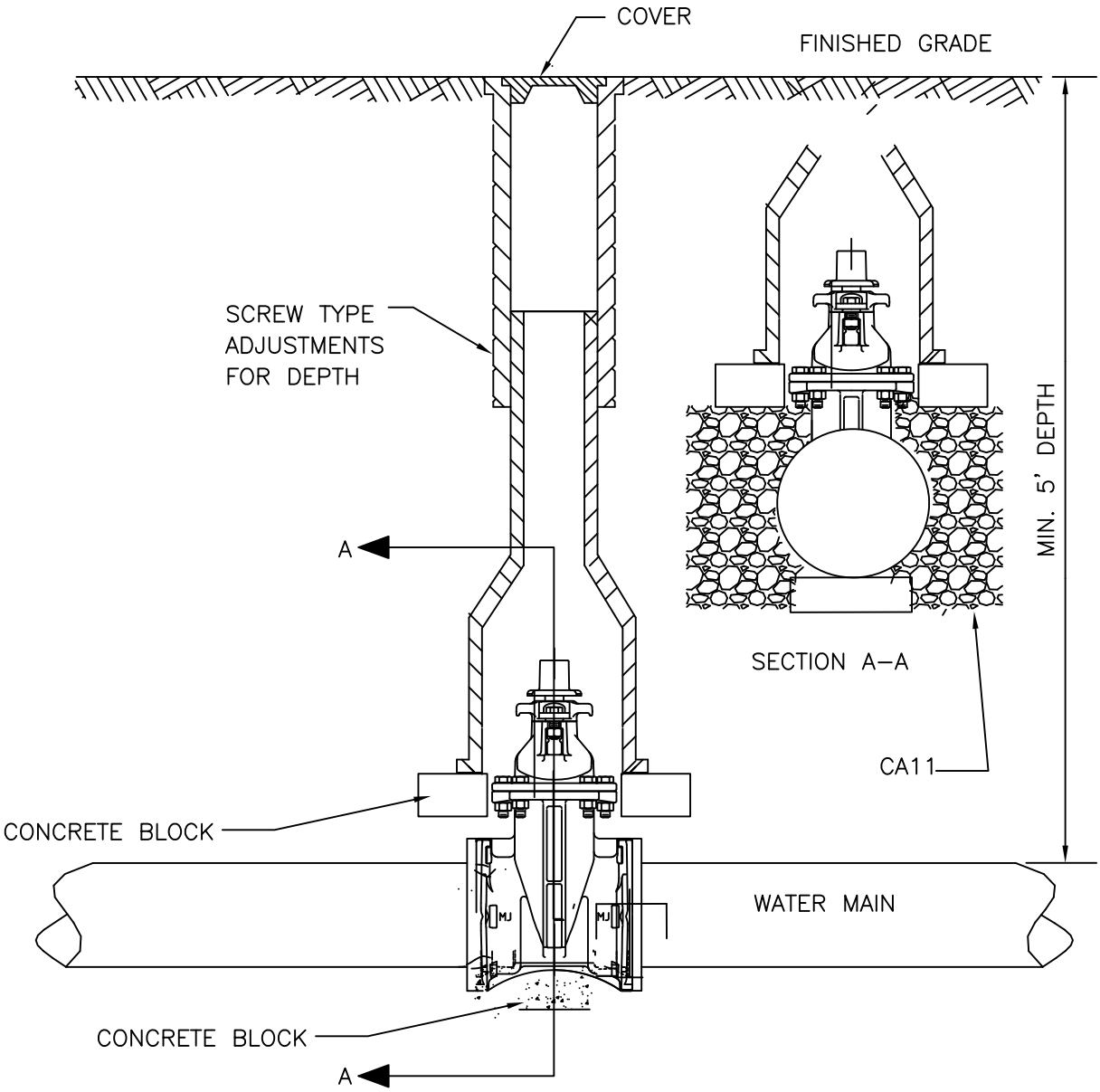

NOTES:

1. TYLER 6850 OR APPROVED EQUAL. FOR LARGER VALVES TYLER 6860 OR APPROVED EQUAL WITH #6 BASE.

2. VALVE BOXES ARE NOT ALLOWED IN PAVED AREAS – VALVE VAULT SHALL BE PROVIDED. CONTRACTOR SHALL SUBMIT IN WRITING ANY LOCATION WHERE A VAULT IS NOT INTENDED TO BE INSTALLED AND SPECIFIC REASON WHY IT CANNOT BE INSTALLED. THIS MUST BE APPROVED IN WRITING BY DPU–WATER.

3. RESTRAINT GLANDS REQUIRED ON EACH SIDE OF VALVE IF STUBBED FOR FUTURE CONNECTION OR PIPE BEND WITHIN TWO PIPE LENGTHS OF VALVE.

City of Naperville **STANDARD DETAIL**	**VALVE BOX**	WATER 5 **490.05**
	REVISED: 01/01/2013	SHEET 1 OF 1

NOTES:

1. CHAIN AND CHAIN HOOKS SHALL BE REMOVED FROM HYDRANT
2. HYDRANT SHALL BE FACTORY PAINTED WITH 2 COATS OF TNEMEC VERSATONE 82 HS (OR APPROVED EQUAL) SAFETY ORANGE
3. ALL FASTENERS/HARDWARE BELOW GRADE SHALL BE STAINLESS STEEL. (GRADE 304 MIN.)

PERMITTED TYPES:

- WATEROUS PACER WB-67 5-1/4"
- CLOW MEDALLION 5-1/4"
- MUELLER A-423 5-1/4"

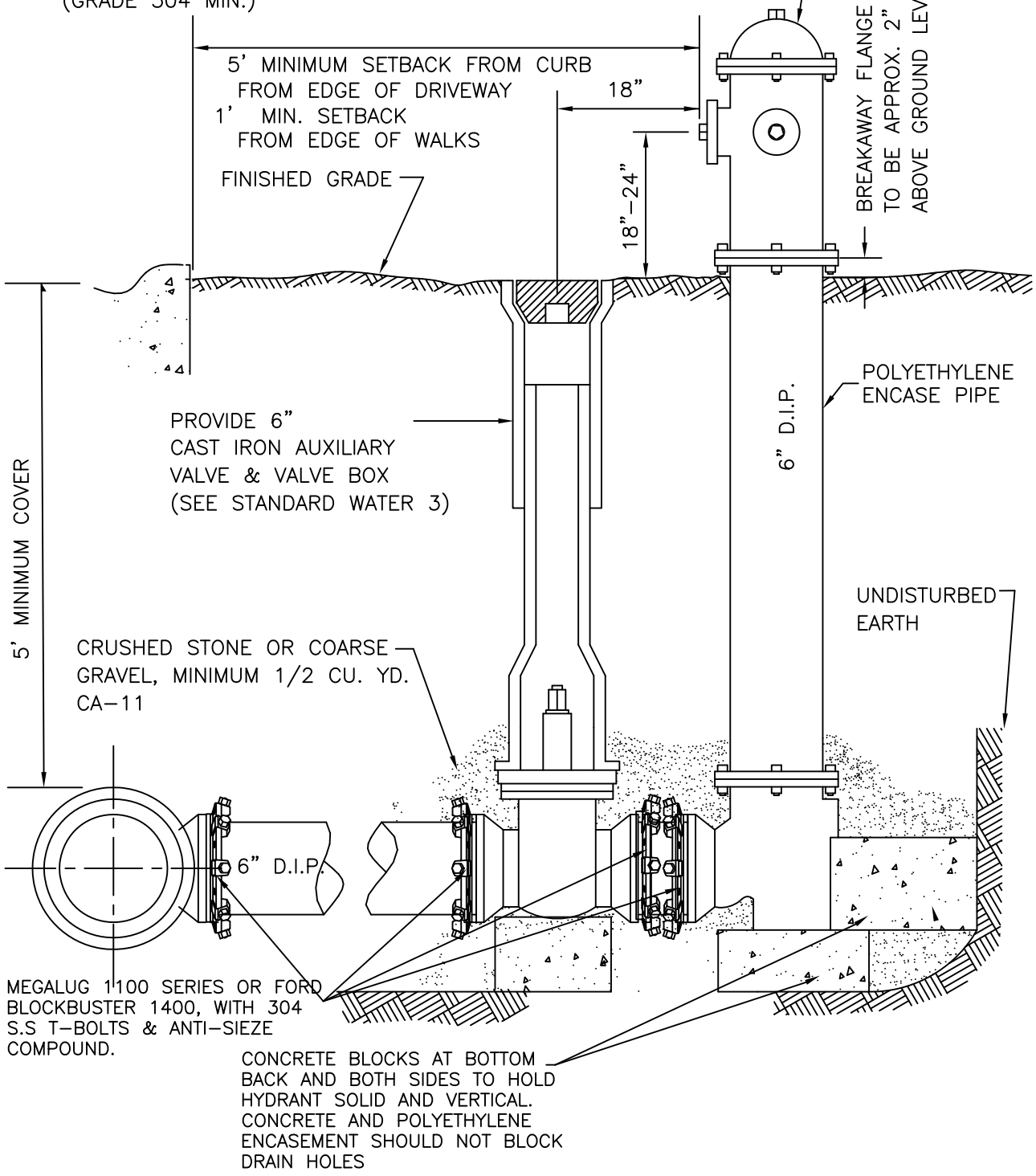

City of Naperville STANDARD DETAIL	HYDRANT	WATER 6
	REVISED: 05/15/2015 — SHEET 1 OF 1	490.06

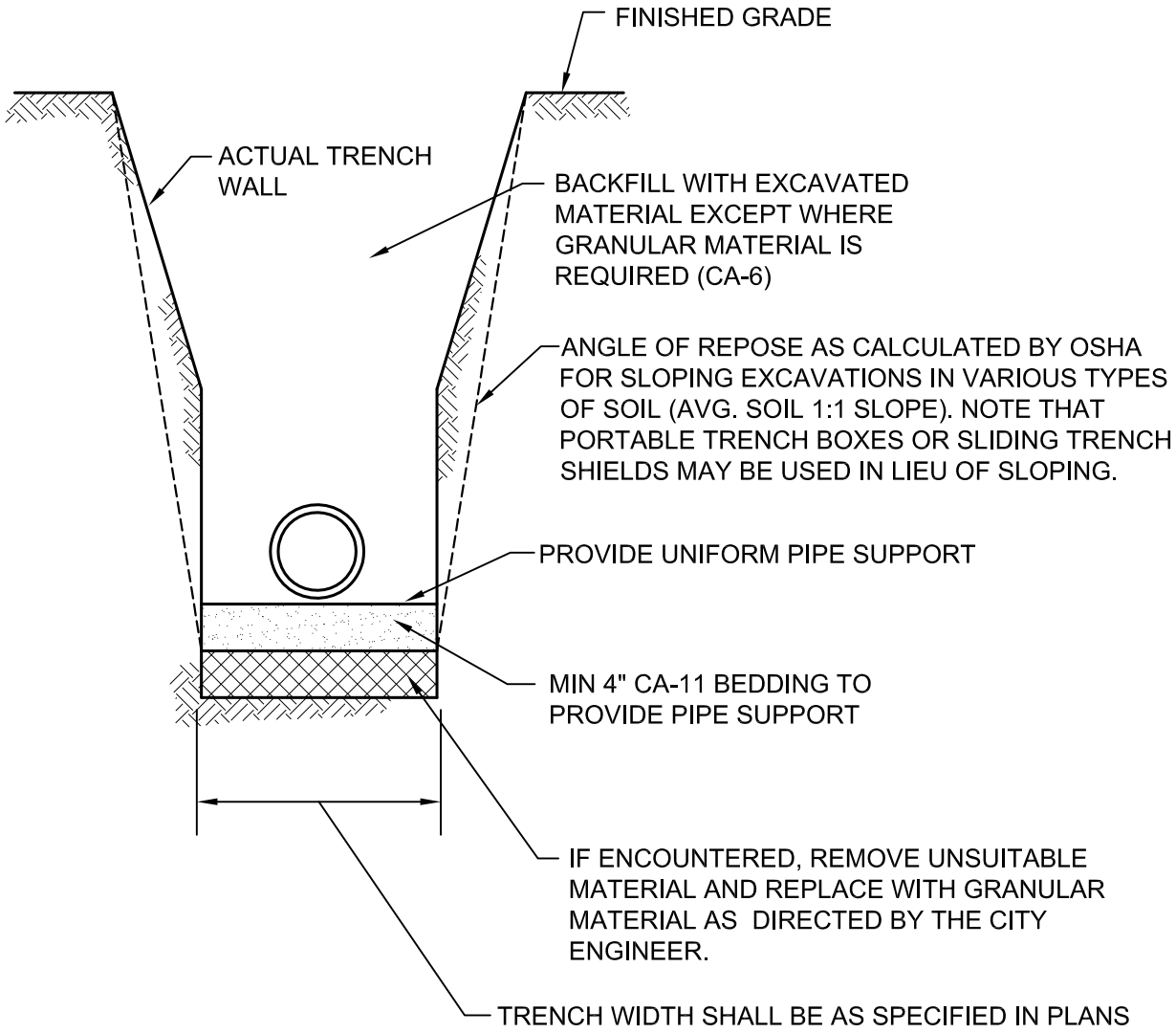

NOTES:

1. IN PAVED AREAS ALL TRENCHES SHALL BE COMPACTED IN ACCORDANCE WITH SECTION 550.07 OF THE IDOT STANDARD SPECIFICATIONS FOR ROAD AND BRIDGE CONSTRUCTION. METHOD 1. 95% MINIMUM STANDARD PROCTOR.

2. DUCTILE IRON WATER MAIN TO BE CLASS 52. ALL DUCTILE IRON PIPE IS TO BE ENCASED IN POLYETHYLENE FILM. POLYETHYLENE ENCASEMENT TO BE INSTALLED IN ACCORDANCE WITH AWWAC105A21.5-99.(OR LATEST EDITION)

3. STAINLESS STEEL NUTS, BOLTS/T-BOLTS, AND WASHERS, TYPE 304 OR BETTER, WILL BE REQUIRED ON ALL WATER MAIN INSTALLATIONS. THIS WOULD APPLY TO HYDRANTS, TAPPING SLEEVES, VALVES, FITTINGS, RESTRAINT, AND OTHER APPURTENANCES BURIED OR IN VALVE VAULTS. MECHANICAL JOINTS AND RESTRAINT GLANDS REQUIRE 304 STAINLESS STEEL T-BOLTS. AN ANTI-SEIZE COMPOUND SHALL BE FACTORY APPLIED TO NUTS OR BOLTS - ANY DAMAGE TO THIS COATING SHALL BE REPAIRED WITH FIELD-APPLIED, APPROVED ANTI-SEIZE COMPOUND THAT IS A MOLYBDENUM-BASE LUBRICANT, BOSTIK NEVER-SEEZ OR APPROVED EQUAL.

City of Naperville STANDARD DETAIL	WATER MAIN TRENCH SECTION	WATER 10 490.10
	REVISED: 01/01/2013 — SHEET 1 OF 1	

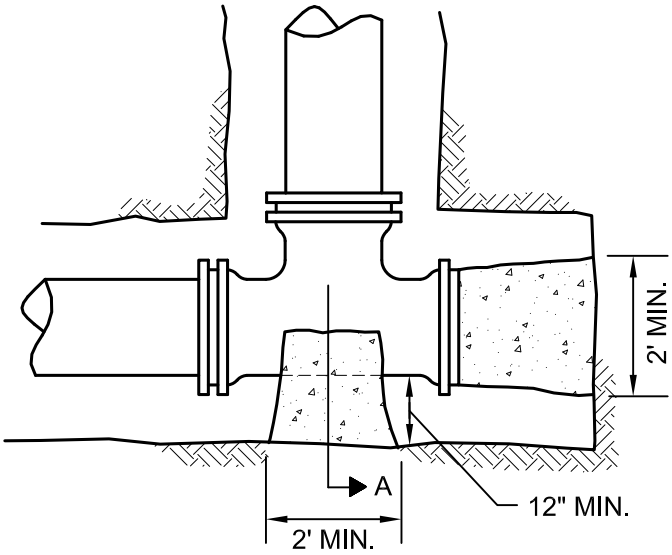

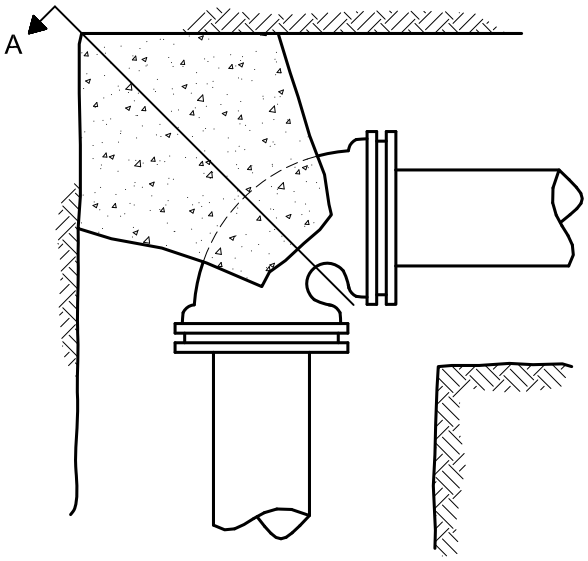

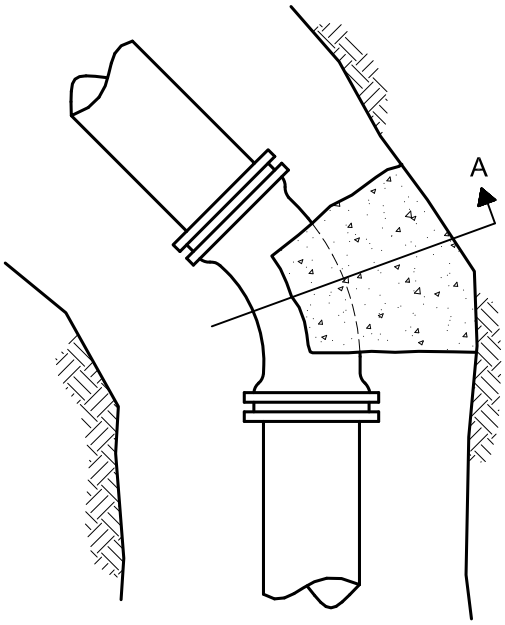

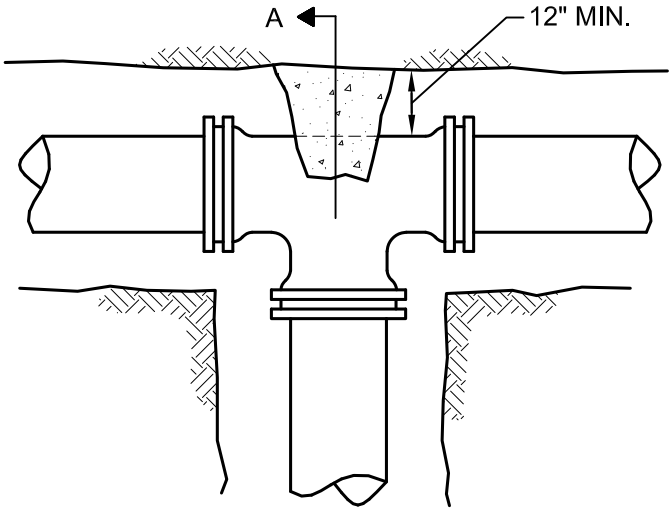

1. THRUST BLOCKING TO PREVENT MOVEMENT OF LINES UNDER PRESSURE AT BENDS, TEES, CAPS, VALVES, HYDRANTS, & AT POINTS SPECIFIED BY THE ENGINEER SHALL BE CLASS "SI".
2. CONCRETE A MINIMUM OF 12" THICK, PLACED BETWEEN SOLID GROUND & THE FITTING, AND SHALL BE ANCHORED IN SUCH A MANNER THAT THE PIPE AND FITTING WILL BE ACCESSIBLE FOR REPAIRS.
3. THRUST BLOCKS SHALL BE PLACED AT BENDS OF 11-1/4° OR MORE.
4. PIPE BENDS TO BE POLYETHYLENE ENCASED.
5. JOINT RESTRAINT AT BEND AND LENGTH OF PIPE EACH DIRECTION FROM BENDS AS REQUIRED BY THE CITY OF NAPERVILLE IF UNDISTURBED SOIL NOT AVAILABLE.
6. THRUST BLOCK FOR PIPES LARGER THAN 12"ø MUST BE POURED IN PLACE

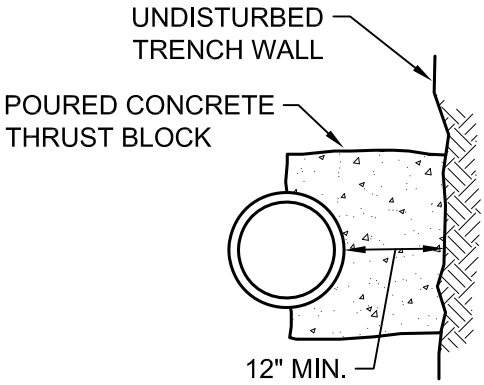

SECTION A

City of Naperville
STANDARD DETAIL

THRUST BLOCK

REVISED: 05/15/2015 | SHEET 1 OF 1

WATER 11

490.11

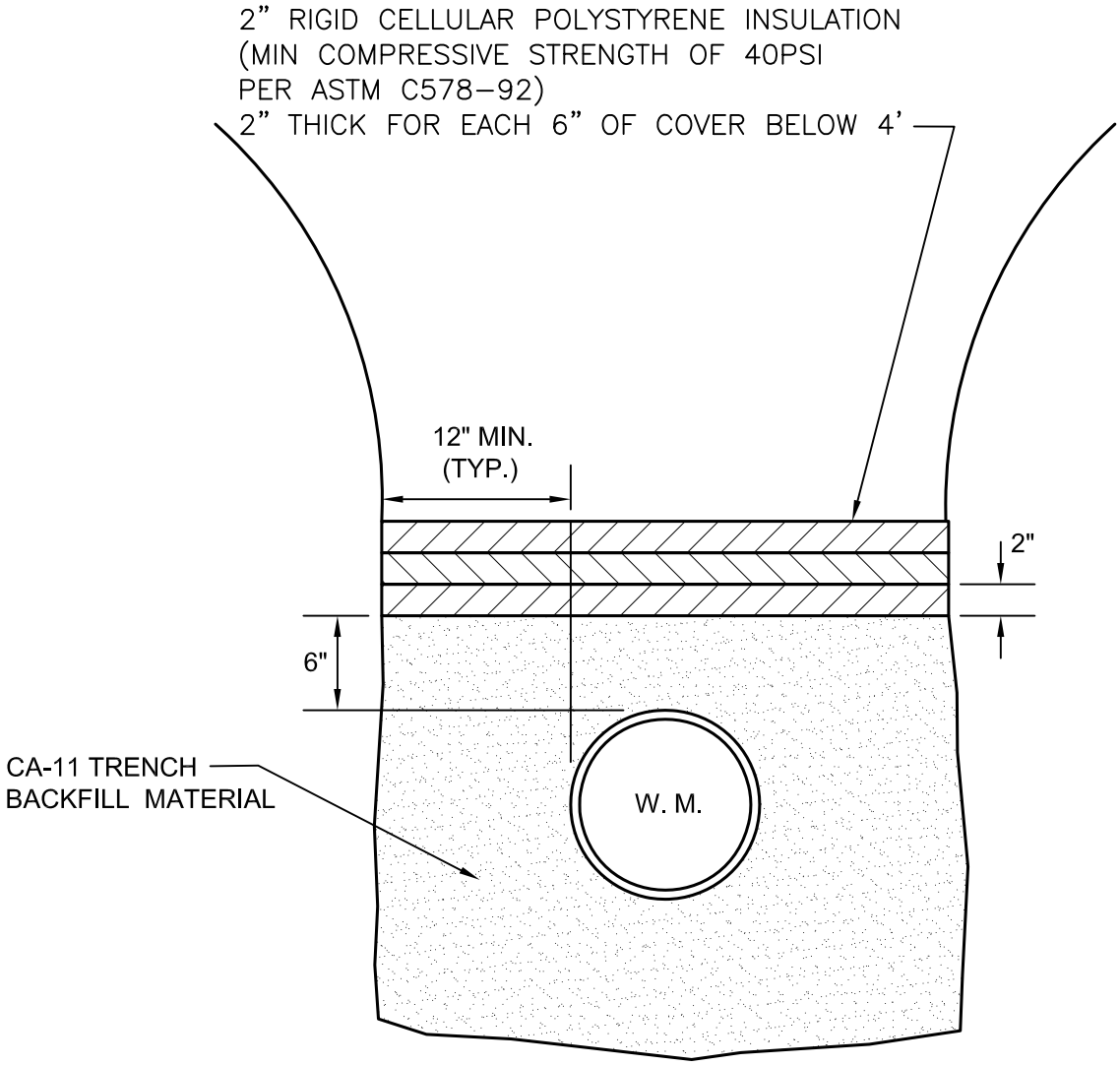

NOTE:
THIS METHOD MAY ONLY BE USED WHEN A MINIMUM 5' DEPTH TO THE TOP OF PIPE CANNOT BE ACHIEVED AND ONLY WITH THE WRITTEN APPROVAL OF THE CIVIL ENVIRONMENTAL ENGINEERING & CONSTRUCTION MANAGEMENT DIVISION, DEPARTMENT OF PUBLIC UTILITIES - WATER.

City of Naperville STANDARD DETAIL	PIPE INSULATION	WATER 12 490.12
	REVISED: 01/01/2013 — SHEET 1 OF 1	

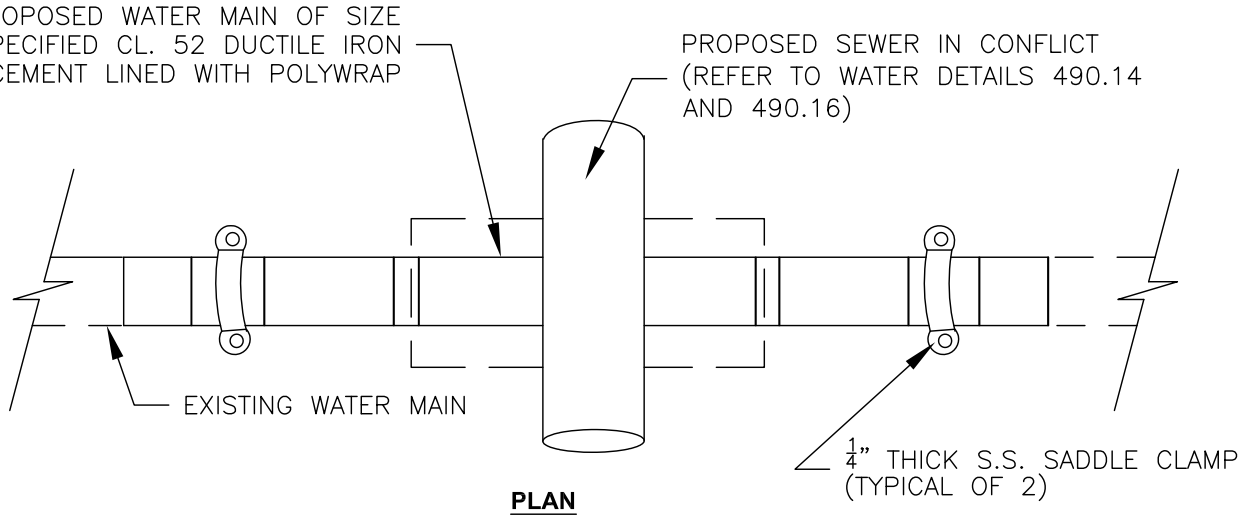

PLAN

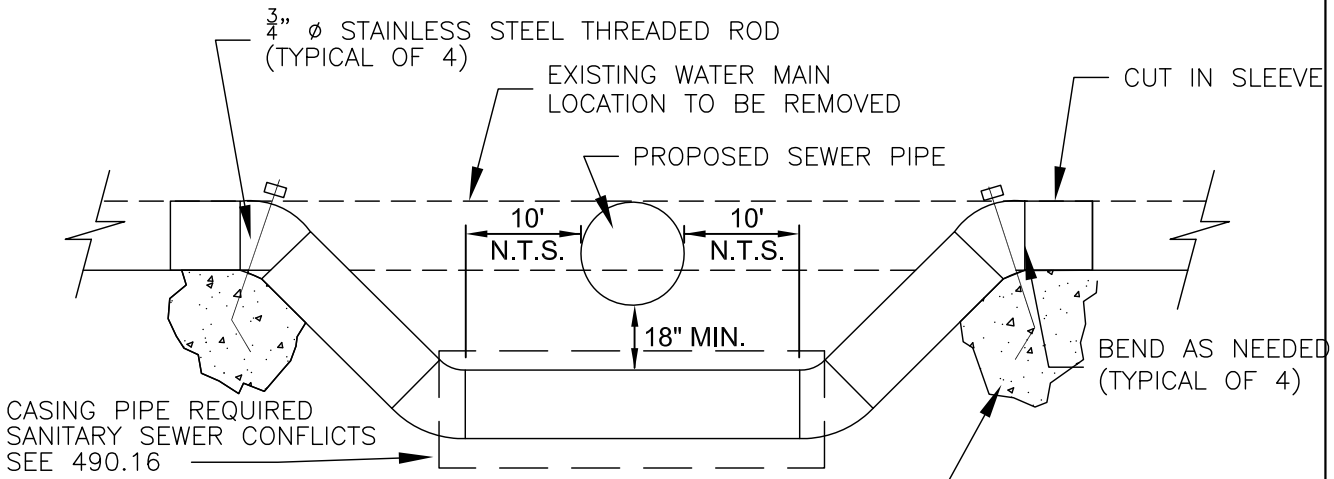

PROFILE

1.) PIPING TO BE DISINFECTED DURING INSTALLATION. ALL NEW JOINTS SHALL BE INSTALLED WITH MEG-A-LUG, OR APPROVED EQUAL, JOINT RESTRAINT. CONTRACTOR SHALL USE 22 1/2 OR 11 1/4 DEGREE BENDS IN LIEU OF 45 DEGREE BENDS WHERE POSSIBLE.

2.) VERTICAL THRUST BLOCKS UNDER BENDS SHALL BE 1 C.Y. MINIMUM OR SIZED AS NEEDED TO RESTRAIN BENDS. CONCRETE TO SUFFICIENTLY CURE PRIOR TO TESTING. POURED CONCRETE SHALL NOT BE PLACED AROUND PIPE BOLTS OR HINDER FUTURE MAINTENANCE.

POURED IN PLACE CONCRETE (CLASS X) FOR VERTICAL THRUST BLOCK. BEND THREADED ROD TO PREVENT PULLOUT. (TYPICAL OF 2)

3.) POLYWRAP SHOULD BE IN SHEETS INSTALLED UNDER WATER MAIN WITH ALL PIPING JOINTS EXPOSED UNTIL AFTER PRESSURE TEST IS COMPLETE, THEN WRAPPED AND TAPED IN PLACE PRIOR TO BACKFILLING.

4.) SEWERS INSTALLED ABOVE WATER MAIN SHALL BE DESIGNED TO PROVIDE WATER MAIN PROTECTION AS REQUIRED BY I.E.P.A

5.) ALL PIPING TO BE FLUSHED AND TWO SAFE CONSECUTIVE BACTERIAL SAMPLES TAKEN PRIOR TO CITY PLACING MAIN BACK IN SERVICE.

City of Naperville **STANDARD DETAIL**	**LOWERING/ADJUSTING WATER MAIN** REVISED: 05/15/2015 — SHEET 1 OF 1	WATER 13 **490.13**

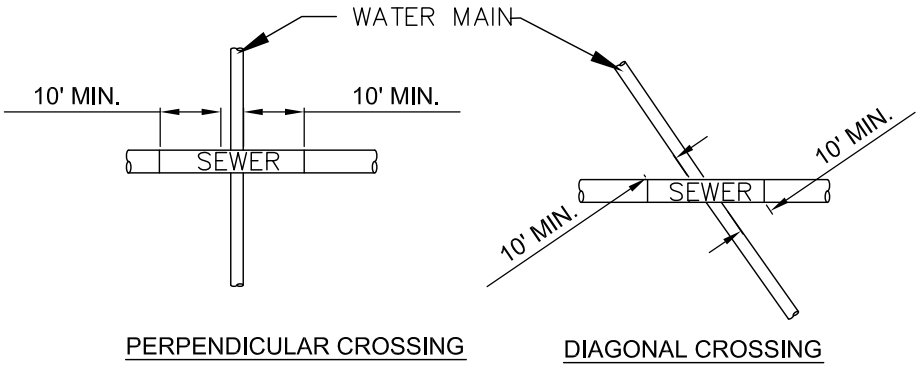

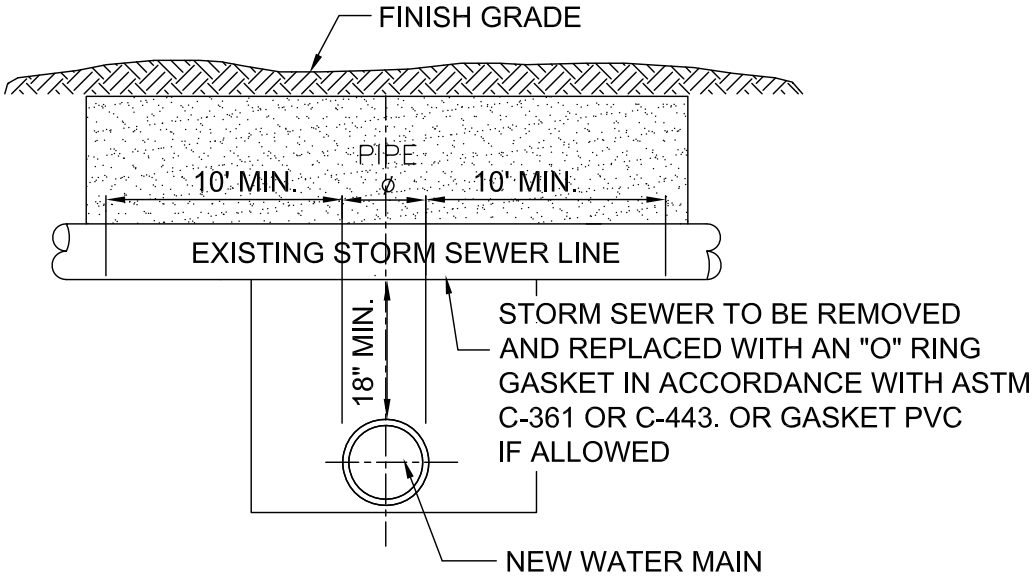

NOTE:
NEW STORM SEWER INSTALLATION SHALL BE GASKETED STRUCTURE TO STRUCTURE

City of Naperville **STANDARD DETAIL**	**WATER MAIN PROTECTION FROM EXISTING STORM SEWER PIPE** REVISED: 01/01/2013 — SHEET 1 OF 1	WATER 14 **490.14**

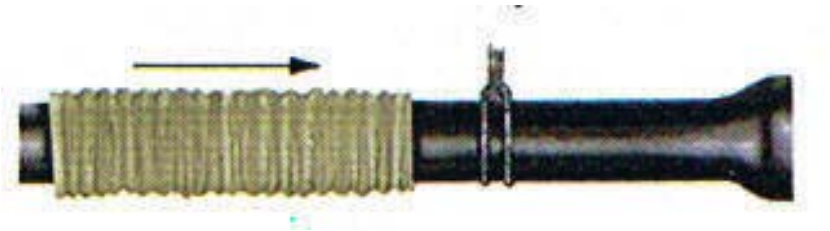

CUT A SECTION OF POLYETHYLENE TUBE APPROXIMATELY TWO FEET LONGER THAN THE PIPE SECTION. REMOVE ALL LUMPS OF CLAY, MUD, CINDERS, OR OTHER MATERIAL THAT MIGHT HAVE ACCUMULATED ON THE PIPE SURFACE DURING STORAGE. SLIP THE POLYETHYLENE TUBE AROUND THE PIPE, STARTING AT THE SPIGOT END. BUNCH THE TUBE ACCORDION-FASHION ON THE END OF THE PIPE. PULL BACK THE OVERHANGING END OF THE TUBE UNTIL IT CLEARS THE PIPE END.

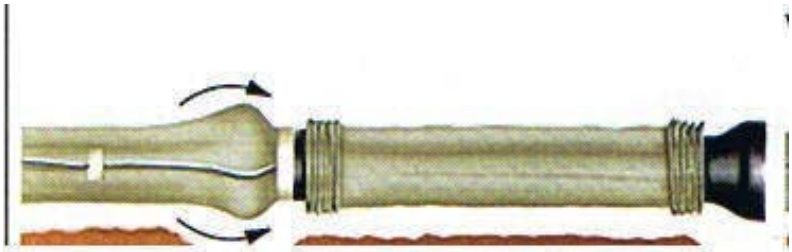

MAKE THE OVERLAP OF THE POLYETHYLENE TUBE BY PULLING BACK THE BUNCHED POLYETHYLENE FROM THE PRECEDING LENGTH OF PIPE AND SECURING IT IN PLACE. NOTE: THE POLYETHYLENE MAY BE SECURED IN PLACE BY USING TAPE, STRING, PLASTIC TIE STRAPS, OR ANY OTHER MATERIAL CAPABLE OF HOLDING THE POLYETHYLENE ENCASEMENT SNUGLY AGAINST THE PIPE.

TAKE UP SLACK IN THE TUBE ALONG THE BARREL OF THE PIPE TO MAKE A SNUG, BUT NOT TIGHT, FIT. FOLD EXCESS POLYETHYLENE BACK OVER THE TOP OF THE PIPE.

REPAIR ALL SMALL RIPS, TEARS OR OTHER TUBE DAMAGE WITH MANUFACTURER APPROVED ADHESIVE TAPE.

1. COVER BENDS, REDUCERS AND OTHER PIPE-SHAPED APPURTENANCES WITH POLYETHYLENE IN THE SAME MANNER AS THE PIPE.

2. WRAP VALVES, TEES AND OTHER ODD-SHAPED APPURTENANCES WITH A FLAT SHEET OR SPLIT LENGTH OF POLYETHYLENE TUBE BY PASSING THE SHEET UNDER THE APPURTENANCES AND BRINGING IT UP AROUND THE BODY. MAKE SEAMS BY BRINGING THE EDGES OF THE POLYETHYLENE SHEET TOGETHER, FOLDING OVER TWICE, AND TAPING DOWN.

3. POLYETHYLENE ENCASEMENT TO BE IN ACCORDANCE WITH A.W.W.A. C105-99OR LATEST VERSION.

4. COPPER SERVICE TAPS ARE TO BE WRAPPED WITH POLYETHELENE OR A SUITABLE DIELECTRIC APE FOR A MINIMUM CLEAR DISTANCE OF 3' AWAY FROM THE MAIN.

City of Naperville **STANDARD DETAIL**	**POLYETHYLENE ENCASEMENT** REVISED: 01/01/2013 — SHEET 1 OF 1	WATER 15 **490.15**

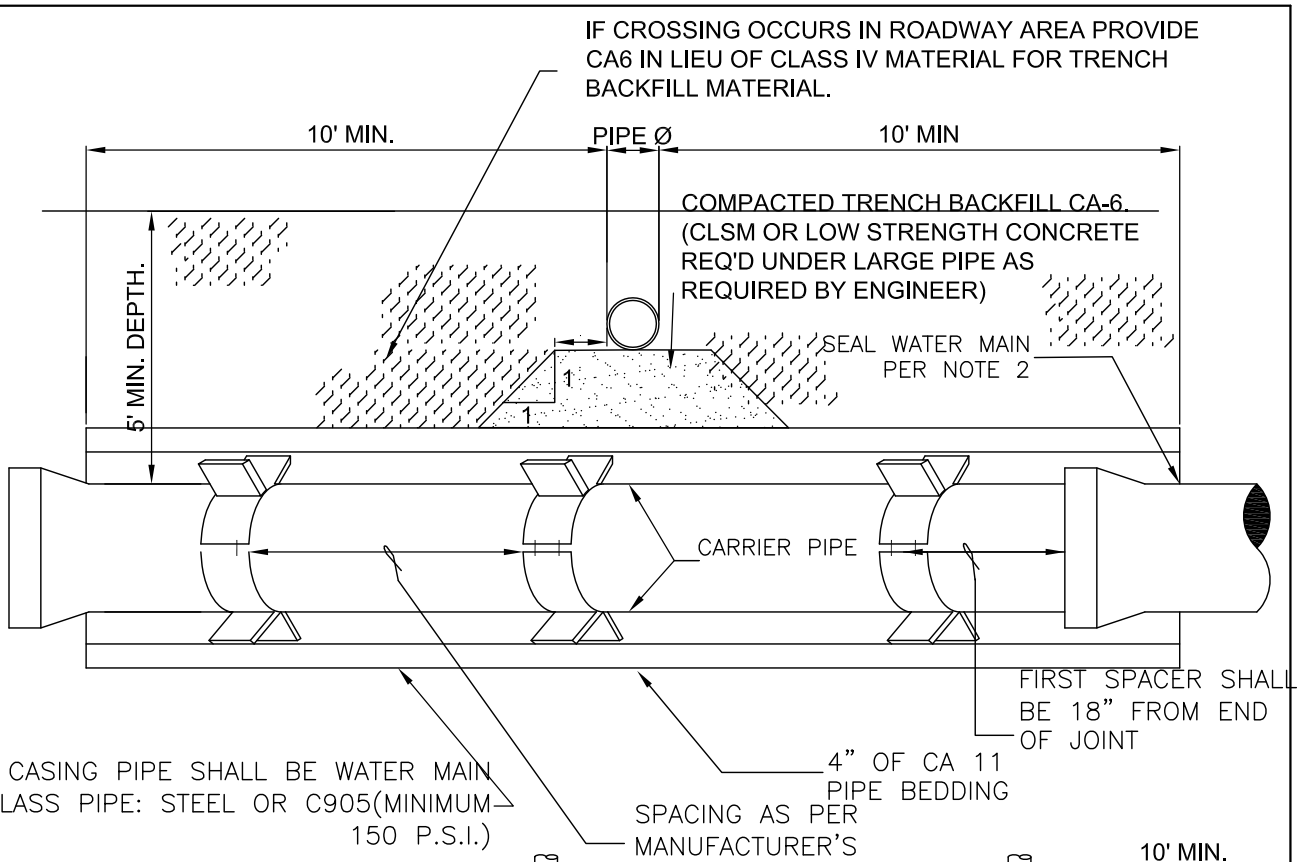

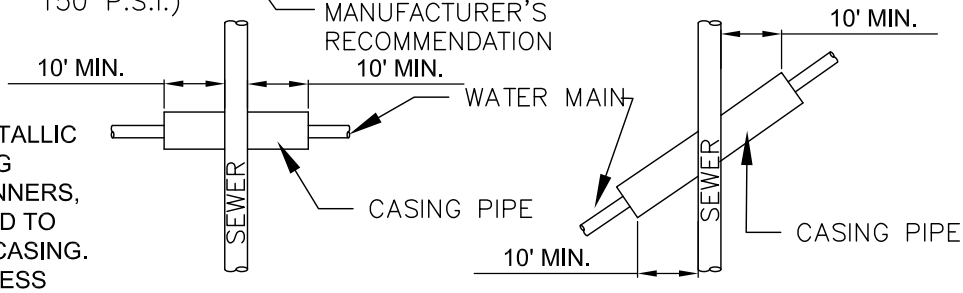

PERPENDICULAR CROSSING

DIAGONAL CROSSING

1. MANUFACTURED NON-METALLIC OR NON-CORROSIVE CASING SPACERS, ADJUSTABLE RUNNERS, OR CRADLES SHALL BE USED TO SUPPORT THE PIPE IN THE CASING. SPACERS TO BE ALL STAINLESS STEEL CASING SPACER WITH ULTRA HIGH MOLECULAR WEIGHT POLYMER BEARING SURFACE; CASCADE WATERWORKS PART NO. CCS OR APPROVED EQUAL, AND TO BE SPACED PER MANUFACTURERS SPECIFICATIONS.

2. THE ANNULAR SPACE SHALL BE COMPLETELY FILLED WITH PEA GRAVEL OR CELLULAR FOAM GROUT, AS REQUIRED BY PERMITTING AGENCY, AND PROVISIONS SHALL BE MADE SO THAT NO VOIDS ARE LEFT. THE CASING PIPE MUST BE SEALED AT END WITH DOUBLE SOLID CONCRETE BRICK AND MORTAR OR POURED CONCRETE 8" IN THICKNESS.

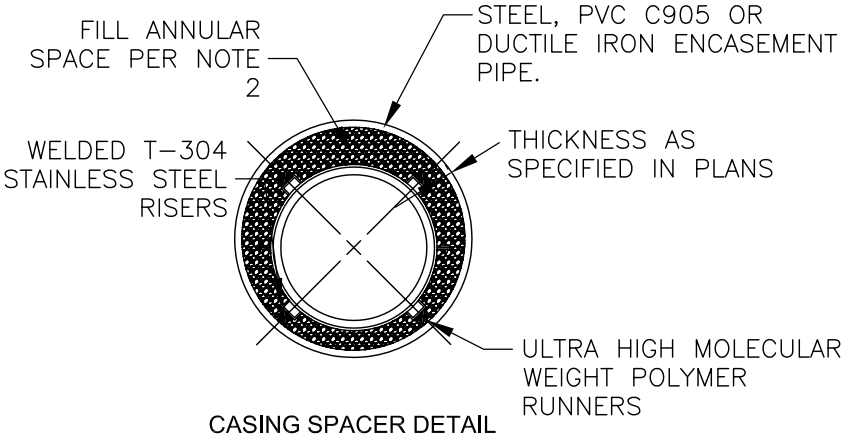

CASING SPACER DETAIL

City of Naperville
STANDARD DETAIL

WATER MAIN CASING PIPE

REVISED: 01/01/2013 | SHEET 1 OF 1

WATER 16

490.16

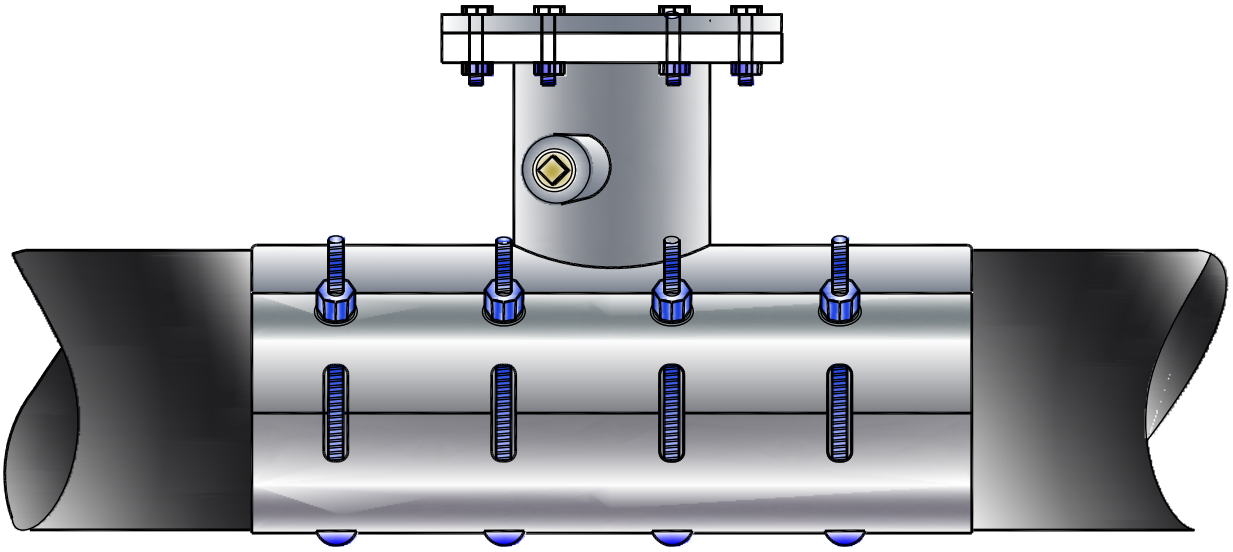

SLEEVE TO BE PRESSURE RATED AT 150 PSI WORKING PRESSURE AND 225 PSI TEST PRESSURE.

1. CONSTRUCTION TO BE ALL STAINLESS T-304, 18-8 STAINLESS STEEL , 14 GAUGE (MINIMUM).

2. GASKETS TO PROVIDE 360 DEGREE PIPE COVERAGE IN ADDITION TO A FULL CIRCUMFERENCE BRANCH SEAL GASKET.

3. EXISTING PIPE TO BE DISINFECTED PRIOR TO INSTALLATION OF LINE STOP

4. STAINLESS STEEL TEST PORT AND PLUG SHALL BE PROVIDED AND THE LINE STOP SLEEVE IS TO BE PRESSURE TESTED PRIOR TO CUTTING THE EXISTING PIPE.

5. V-LUGS SHALL BE FABRICATED TO THE SLEEVE AND DROP-IN STAINLESS STEEL BOLTS, NUTS AND WASHERS (18-8 MINIMUM GRADE) PROVIDED. NUTS SHALL BE COATED WITH ANTI-SIEZE COMPOUND TO PREVENT GALLING.

6. PROVIDE AS-BUILT FOR LOCATION AND ELEVATION OF TOP OF FLANGE ON RECORD DRAWINGS.

7. ACCEPTABLE LINE STOP SLEEVES ARE HYDRA STOP PREMIER LINE STOP FITTING OF ALL STAINLESS STEEL CONSTRUCTION WITH DROP-IN BOLT OPTION AND SMITH BLAIR MODEL 685 ALL STAINLESS STEEL LINE STOP TAPPING SLEEVE WITH. ALL BOLTS, NUTS, AND WASHERS AND BLIND FLANGES TO BE 18-8 TYPE 304 STAINLESS. STOPPLE (COMPLETION) PLUG TO BE DUCTILE IRON OR STAINLESS STEEL.

City of Naperville **STANDARD DETAIL**	**LINE STOP TAPPING SLEEVE** REVISED: 01/01/2013 — SHEET 1 OF 1	WATER 17 **490.17**

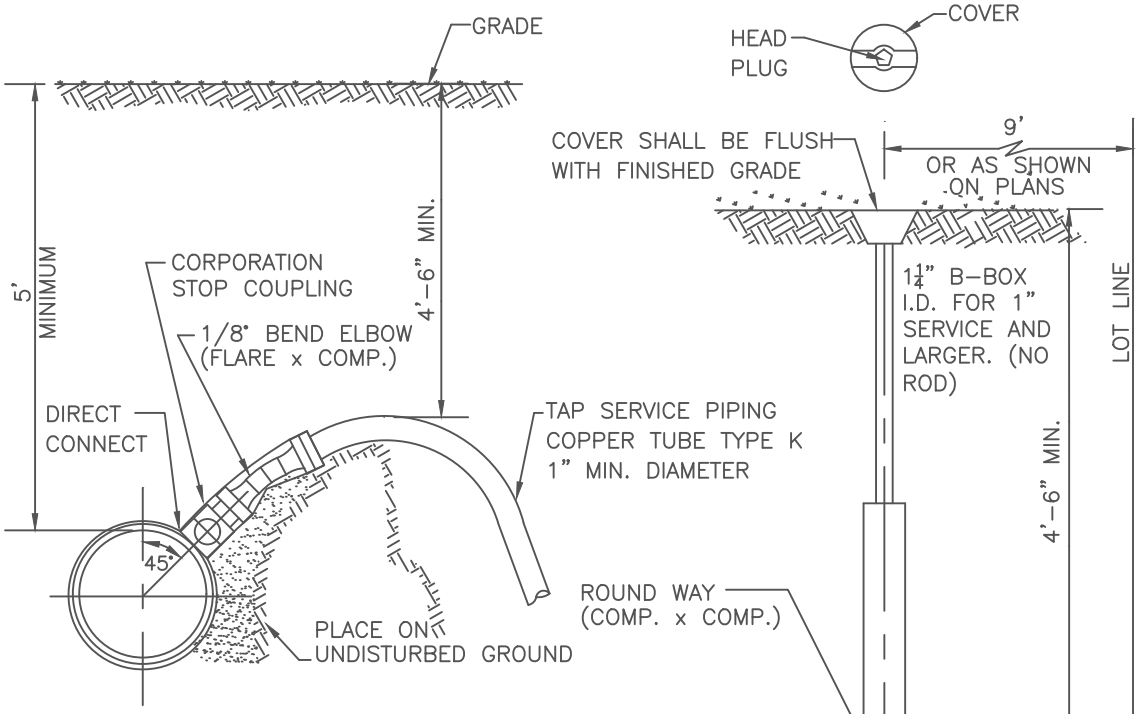

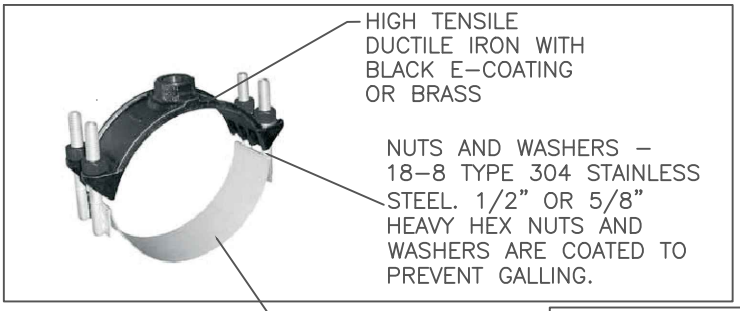

WATER MAIN SIZE	TAP SIZE	CONNECTION TYPE
6"ø OR SMALLER	1"ø OR SMALLER	DIRECT CONNECTION
	1 1/4"ø OR LARGER	SADDLE CONNECTION
8"ø OR LARGER	1 1/4"ø OR SMALLER	DIRECT CONNECTION
	1 1/2"ø OR LARGER	SADDLE CONNECTION

NOTES:

1. CORPORATION IS TO BE FLARING TYPE (FORD F-600 OR EQUAL BY MUELLER OR A.Y. MCDONALD). FOR SERVICE SIZE 1¼": A.Y. MCDONALD 4701Q CORP STOP THREADED INLET TO COMPRESSION OUTLET OR EQUAL
2. 1/8° BEND ELBOW – FEMALE FLARE TO COMPRESSION: FORD LA04. OR AN APPROVED EQUAL BY MUELLER, OR A.Y. MCDONALD (NOT AVAILABLE IN IN 1¼" SIZED SEE NOTE 1.).
3. B-BOX IS ARCH PATTERN AT ROUNDWAY WITH 1-1/4" UPPER SECTION, WITH 1-1/4" BRASS PENTAGON PLUG. SCREW ON B-BOX NOT APPROVED
4. CURB STOP IS WITH COMPRESSION COUPLING – FORD B44 CURB STOP, OR EQUAL BY MUELLER, OR A.Y. MCDONALD.
5. B-BOX HAS 1¼" THREADED BRASS PENTAGON PLUG WITH THE WORD "WATER" IN RAISED LETTERS ON CAP. (1-1/4" PENT. PLUG FOR 1-1/4" ID. B-BOXES).
6. CORPORATION STOPS SHALL BE INSTALLED A MINIMUM OF 18" FROM PIPE JOINTS AND ENDS. MULTIPLE INSTALLATIONS SHOULD BE STAGGERED AROUND THE MAIN BY 22-1/2° AND SEPARATED FROM EACH OTHER BY 18".
7. WATER SERVICE LINE SMALLER THAN 3" SHALL BE TYPE K COPPER. IF JOINTS ARE REQUIRED DUE TO LENGTH OF SERVICE, THEN ONLY COMPRESSION TYPE COUPLING SHALL BE PERMITTED. NO SOLDERED OR FLARED TYPE JOINTS ARE ALLOWED.
8. SERVICE TAPS SHALL REQUIRE SADDLES IN ACCORDANCE WITH CHART BELOW. SADDLES SHALL BE STAINLESS STEEL DUAL BANDED, DUCTILE IRON OR BRASS SADDLE (FORD FS202, 202BS OR APPROVED EQUAL) REQ'D FOR TAPS.
9. ALL WATERMAIN AND APPURTENANCES MUST COMPLY WITH SECTION 1417 (A)(1)OF THE SAFER DRINKING WATER ACT (SDWA). ALL PRODUCT USED FOR DISPENSING POTABLE WATER MUST MEET BOTH THE NSF 61 AND NSF 372 TEST OF STANDARDS VIA THIRD PARTY TESTING AND CERTIFICATIONS.

City of Naperville
STANDARD DETAIL

SERVICE TAP AND CONNECTION

EFFECTIVE: 7/17/2020 | SHEET 1 OF 1

WATER 20

490.20