SECTION 600:
STREET LIGHTING & TRAFFIC SIGNALS

Page No.	Description
600-2	**601 GENERAL**
600-2	601.1 SPECIFICATIONS
600-2	601.2 RESOLUTION OF CONFLICTS
600-2	601.3 START OF CONSTRUCTION
600-2	601.4 RECORD DRAWINGS
600-3	**602 MATERIALS**
600-3	602.1 GENERAL
600-3	602.2 STREET LIGHTING POLES
600-6	602.3 BREAK-AWAY DEVICE
600-6	602.4 STREET LIGHTING POLE FOUNDATIONS
600-8	602.5 LUMINAIRES
600-9	602.6 PHOTO-CELL
600-11	602.7 UNDERGROUND CONDUITS AND ELECTRICAL CABLE
600-12	602.8 ELECTRICAL CABLE, 600 VOLT
600-13	602.9 LIGHTING CABLE FUSE KITS
600-13	602.10 CAST-IN PLACE CONCRETE HANDHOLES
600-14	602.11 COMPOSITE CONCRETE HANDHOLES
600-14	602.12 GROUNDING
600-14	602.13 GROUND ROD
600-15	602.14 STREET LIGHTING CONTROLLER
600-21	602.15 LABELS
600-23	**603 CONSTRUCTION REQUIREMENTS**
600-23	603.1 TRAFFIC SIGNAL SYSTEMS CONTRACTOR PRE-QUALIFICATIONS
600-23	603.2 TRAFFIC SIGNAL SYSTEMS
600-23	603.3 TRENCH AND BACKFILL FOR ELECTRICAL WORK
600-23	603.4 YELLOW WARNING TAPE OVER STREET LIGHTING CABLE
600-23	603.5 TRAFFIC SIGNAL SYSTEM SERVICE INSTALLATION
600-24	603.6 CONDUIT
600-24	603.7 WIRE AND CABLE
600-24	603.8 LUMINAIRES
600-24	603.9 LIGHT POLES AND BREAKAWAY DEVICES
600-24	603.10 FOUNDATIONS
600-24	603.11 HANDHOLES
600-25	**604 INSPECTIONS AND TESTING**
600-25	604.1 STREET LIGHTING SYSTEMS
600-25	604.2 TRAFFIC SIGNAL SYSTEMS
600-26	**690 STANDARD DETAILS**

601 GENERAL

The standards and requirements found in this article are for the materials and construction of street lighting and traffic signal systems within the City of Naperville, Illinois.

601.1 SPECIFICATIONS

All work and equipment performed and installed under this section shall be governed by and shall comply with the following specifications, manuals, and codes listed in Section 102.2. The most current editions and all subsequent revisions and alterations for the specifications are required.

601.2 RESOLUTION OF CONFLICTS

In the event of conflict between the City Standard Specifications and the documents listed in Section 102.2, the City Standard Specifications shall take precedence and/or the City Engineer's decision will prevail. Any questions arising from these specifications should be directed in writing to the City Engineer for a determination.

601.3 START OF CONSTRUCTION

The contractor shall not begin construction until all required permits have been obtained. Copies of all permits obtained by outside agencies must be provided to the city prior to the start of construction.

601.4 RECORD DRAWINGS

Upon completion of work, the contractor shall provide Record Drawings information in conformance with the requirements of Section 110.

602 MATERIALS

602.1 GENERAL
The materials and equipment for installation of street lighting on public streets in Naperville are detailed in the following sections. Other street lighting equipment, such as the East Central Homeowners Organization (ECHO) decorative neighborhood street lights, and the Central Business District (CBD) lights are restricted for use on public streets in their designated areas (ECHO and the CBD), unless otherwise directed by the City Council. Specialized lighting equipment for CBD, ECHO, and other designated areas within the City shall be identical to existing equipment unless otherwise directed by the City Engineer.

602.2 STREET LIGHTING POLES
Light poles shall be in accordance with the Section 1069 of the IDOT Standard Specifications. The contractor shall submit the technical information, to include catalog cut sheets, for each electrical material item for approval prior to ordering the equipment. The pole shall be "UL Listed" with a UL Classification label as complying with UL Standard 1572. All poles shall have an identification label (Detail 690.10).

602.2.1 LOCAL AND NEIGHBORHOOD CONNECTOR STREETS
Street light poles for local and neighborhood connector streets shall be:

a) Street lighting poles shall be spun aluminum and have 23 foot mounting height with a single 8 foot davit arm and cobra head type LED luminaire (Detail 690.01).
    - The outside diameter of the top of the pole shall be 4.5 inches.
    - The outside diameter of the base of the pole shall be 7 inches.
    - The wall thickness shall be a minimum of 0.156 inches.
    - The bolt circle of the pole base shall be a minimum of 10 inches and a maximum of 11 inches in diameter.
    - The luminaire arm shall be davit type of 4 1/2 inch diameter tapered to 2 3/8 inch diameter of bending radius 4 feet. The davit arm shall be fastened to the pole by 1/2 inch stainless steel bolts, nuts, and lock washers.
    - The pole and arm shall be finished in a Dark Bronze Powder Coat finish over 100 grit polished finished surface. The Dark Bronze Powder Coat finish shall have a minimum 5-year guarantee by the manufacturer.

602.2.2 COLLECTOR STREETS
Street light poles for collector streets shall be:

a) Street lighting poles for residential areas shall be spun aluminum and have 32 foot mounting height with either a single 10 foot davit arm and cobra head type LED luminaire, or twin 10 foot davit arms and cobra head type LED luminaires (Details 690.02 and 690.03).
    - The outside diameter of the top of the pole shall be 4.5 inches.
    - The outside diameter of the base of the pole shall be 8 inches.

- The wall thickness shall be a minimum of 0.219 inches.
- The bolt circle of the pole base shall be a minimum of 11 inches and a maximum of 12 inches in diameter.
- The luminaire arm shall be davit type of 4 1/2 inch diameter tapered to 2 3/8 inch diameter of bending radius 5 feet. The davit arm shall be fastened to the pole by 1/2 inch stainless steel bolts, nuts, and lock washers.
- The pole and arm shall be finished in a Dark Bronze Powder Coat finish over 100 grit polished finished surface. The Dark Bronze Powder Coat finish shall have a minimum 5-year guarantee by the manufacturer

b) Street lighting poles for non-residential areas shall be spun aluminum and have 32 foot mounting height with either a single 10 foot truss arm and cobra head type LED luminaire or twin 10 foot truss arms and cobra head type LED luminaire (Details 690.04 and 690.05).
   - The outside diameter of the top of the pole shall be 6 inches.
   - The outside diameter of the base of the pole shall be 8 inches.
   - The wall thickness shall be a minimum of 0.219 inches.
   - The bolt circle of the pole base shall be a minimum of 11 inches and a maximum of 12 inches in diameter.
   - The luminaire arm shall be truss type with a rise of 34 inches. The arm shall be secured to the pole shaft by a clamp type bracket. The arm shall be mounted to the pole by a clamp style bracket by four 1/2 inch stainless steel bolts, nuts, and lock washers.
   - The pole and arm shall have natural aluminum finish with a 100 grit polished finished surface.

602.2.3 ARTERIAL STREETS

Street light poles for arterial streets shall be:

a) Street lighting poles for minor arterial streets shall be spun aluminum and have 40 foot mounting height with a single 12 foot truss arm and cobra head type LED luminaire (Detail 690.06).
   - The outside diameter of the top of the pole shall be 6 inches.
   - The outside diameter of the base of the pole shall be than 8 inches.
   - The wall thickness shall be a minimum of 0.250 inches.
   - The bolt circle of the pole base shall be a minimum of 14 ½ inches and a maximum of 15 ½ inches in diameter.
   - The luminaire arm shall be truss type with a rise of 34 inches. The arm shall be secured to the pole shaft by a clamp type bracket. The arm shall be mounted to the pole by a clamp style bracket by four 1/2 inch stainless steel bolts, nuts, and lock washers.
   - The pole and arm shall have natural aluminum finish with a 100 grit polished finished surface.

b) Street lighting poles for major arterial street shall be spun aluminum and have 47.5 foot mounting height with either a single 12 foot truss arm and cobra head type LED luminaire, or twin 12 foot truss arms and cobra head type LED luminaires (Details 690.07 and 690.08).
   - The outside diameter of the top of the pole shall be 6 inches.
   - The outside diameter of the base of the pole shall be 10 inches.
   - The wall thickness shall be a minimum of 0.312 inches.
   - The bolt circle of the pole base shall be a minimum of 14 1/2 inches and a maximum of 15 1/2 inches in diameter.
   - The luminaire arm shall be truss type with a rise of 34 inches. The arm shall be secured to the pole shaft by a clamp type bracket. The arm shall be mounted to the pole by a clamp style bracket by four 1/2 inch stainless steel bolts, nuts, and lock washers.
   - The pole and arm shall have natural aluminum finish with a 100 grit polished finished surface.

602.2.4 CENTRAL BUSINESS DISTRICT (CBD)
Street light poles for CBD area streets shall be:

a) Pedestrian lighting poles shall be fluted aluminum have 10 foot mounting height with a post top Caged Acorn type LED luminaire (Detail 690.09).
   - The outside diameter of the pole shall be 4 inches.
   - The wall thickness shall be a minimum of 0.188 inches.
   - The bolt circle of the pole base shall be 8 3/4 inches in diameter (3 bolts at 120 degrees).
   - 20 ampere-120 volt GFCI receptacle with in-use rated cover.
   - The pole shall be finished in a Black Powder Coat finish over 100 grit polished finished surface. The Black Powder Coat finish shall have a minimum 5-year guarantee by the manufacturer.

b) Street lighting poles shall be spun aluminum and have 30 foot mounting height with a single side mounted area type LED luminaire (Detail 690.10).
   - The outside diameter of the top of the pole shall be 6 inches.
   - The outside diameter of the pole at the base shall be 10 inches.
   - The wall thickness shall be a minimum of 0.250 inches.
   - The bolt circle of the pole base shall be a minimum of 14 inches and a maximum of 15 inches in diameter.
   - 20 ampere-120 volt GFCI receptacle with in-use rated cover.
   - The pole shall be finished in a Black Powder Coat finish over 100 grit polished finished surface. The Black Powder Coat finish shall have a minimum 5-year guarantee by the manufacturer.

602.3 BREAK-AWAY DEVICE

All poles except "Caged Acorn Street Light – 10 Foot (CBD)" shall be connected to the foundation by a breakaway device of a frangible box design (Detail 690.16). Frangible coupling bolts are not acceptable. The breakaway device shall be in accordance with Article 1070.04(b) of the IDOT Standard Specifications. The device shall be approximately 9 inches tall and shall have an aluminum access door. Certification shall be submitted from the supplier of a breakaway device that the particular design meets current AASHTO breakaway requirements. The contractor shall submit the technical information, to include catalog cut sheets. Breakaway devices installed on powder coated poles shall be powder coated to match the color of the pole.

602.4 STREET LIGHTING POLE FOUNDATIONS

602.4.1 METAL FOUNDATION – RESIDENTIAL AND NEIGHBORHOOD CONNECTOR

a) Metal foundations for street lighting poles for residential and neighborhood connector streets shall be 5 feet in length. The contractor shall submit the technical information, to include catalog cut sheets, for the metal foundation for approval prior to ordering the equipment (Detail 690.12).

b) The metal foundation, 5 foot, shall comply with the requirements of Article 1070.01 of the IDOT Standard Specifications and be manufactured and certified by Hubbell-Chance Company or approved equal by the City Engineer.

c) The base plate shall be 12 inch by 12 inch by 1 inch thick. The bolt circle shall be 10 1/2 inch in diameter. The base plate shall have holes drilled and tapped to accept 1 inch diameter threaded studs and jam nuts. The base plate shall be clearly and permanently marked to easily identify the location of the two cable way openings in the shaft. The baseplate shall be AASHTO M 270M, Grade 36

d) The shaft shall be 8 5/8 inches in diameter, machine flame cut to a 5 foot length, with two 18 inch by 2 1/2 inch cable ways located 15 inches below the base plate separated by 180 degrees. The shaft shall be capable of withstanding 10,000-foot pounds of torque after being joined to the base plate.

e) The helix shall be produced by welding 3/8 inch thick steel in a 16 inch diameter helix with a 3 inch pitch to allow for the passage of thicker gravel.

f) The pilot point shall be sheared on a 45 degree angle from 1 1/4 inch round steel bar made of AASHTO M 270 (ASTM 575) steel and at least 6 inches in length.

g) The studs shall be 1 inch diameter in accordance with AASHTO M 314. Nuts shall be hexagon nuts according to AASHTO M 291M and washers shall be according to AASHTO M 293.

h) All material shall be galvanized according to AASHTO M 111.

602.4.2 METAL FOUNDATION – COLLECTOR AND ARTERIAL STREETS

a) Metal foundations for street lighting poles for minor arterial and collector streets shall be 6 feet in length. The contractor shall submit the technical information, to include catalog cut sheets, for the metal foundation for approval prior to ordering the equipment (Detail 690.11).

b) The metal foundation shall comply with the requirements of Article 1070.01 of the IDOT Standard Specifications and be manufactured and certified by Hubbell-Chance Company or approved equal by the City Engineer.

c) The base plate shall be 1 inch thick for 32 foot poles with a bolt circle of 11 1/2 inches in diameter. The base plate shall be 1 1/4 inch thick for 40 foot poles with a bolt circle of 15 inches in diameter. The base plate shall have holes drilled and tapped to accept 1 inch diameter threaded studs. The base plate shall be clearly and permanently marked to easily identify the location of the two cable way openings in the shaft.

d) The shaft shall be from ASTM-A252, grade 2 steel. The shaft shall be 8 5/8 inches in diameter, machine flame cut to a 6 foot length, with two 18 inch by 2 1/2 inch cable ways located 15 inches below the base plate separated by 180 degrees. The shaft shall be capable of withstanding 10,000-foot pounds of torque after being joined to the base plate.

e) The helix shall be produced by welding 3/8 inch thick steel in a 16 inch diameter helix with a 3 inch pitch to allow for the passage of thicker gravel.

f) The pilot point shall be sheared on a 45 degree angle from 1 ¼ inch round steel bar made of AASHTO M 270 (ASTM 575) and at least 6 inches in length.

g) The studs shall be 1 inch diameter in accordance with AASHTO M 314. Nuts shall be hexagon nuts according to AASHTO M 291M and washers shall be according to AASHTO M 293.

h) All material shall be galvanized according to AASHTO M 111.

602.4.3 CONCRETE FOUNDATION

Where soil conditions make it impossible to install metal foundations for street lighting poles, a reinforced concrete foundations may be used. Concrete foundations shall be used for all 47.5 foot poles and for all poles in the CBD. Where concrete foundations are required, a standard concrete foundation shall be used whenever possible (Detail 690.13 and 690.14). When utility conflicts prohibit the use of a standard concrete foundation, an offset concrete foundation may be used at the direction of the City Engineer (Detail 690.15).

a) The concrete foundation shall comply with the requirements of Section 1020 and Article 1070.02 of the IDOT Standard Specifications.

b) Anchor rods, nuts and Fasteners: Anchor bolts shall be ¾ or 1 inch diameter (as shown on the details) and shall be according to ASTM F1554 Grade 725. Nuts shall be hexagon nuts according to ASTM A 194 2H or ASTM A 563 DH, and washers shall be according to ASTM F 436. Anchor rods, nuts and washers shall be hot dip galvanized according to AASHTO M232.

c) Each foundation shall include a copper coated steel ground rod not less than 3/4 inch in diameter and not less than 10 feet in length.

d) Reinforced street lighting pole foundations shall be 18 inches in diameter for 10 foot post top poles and 24 inches in diameter for all other poles. The outside top edge of the foundation shall have a 3/4 inch chamfer. Where breakaway transformer bases are used, the top of the finished foundation shall not protrude more than 4 inches above the finished grade within a 60 inch chord across the foundation, with the anchor rods included, in accordance with AASHTO guidelines. The anchor bolts, studs, or rods shall protrude 2 3/4 inches above the concrete foundation.

e) The anchor bolts shall be inside the cage of reinforcing steel.

f) Concrete shall be class SI concrete.

g) PVC conduit raceways for non-CBD areas shall be 2 1/2 inches for insertion of 1 1/4 inch HDPE lighting conduit. PVC conduit raceways for 10 foot CBD poles shall be 2 1/2 inches for insertion of 1 1/2 inch HDPE lighting conduit and 2 inches for insertion of 1 inch HDPE CCTV conduit. PVC conduit raceways for 30 foot CBD poles shall be 2 1/2 inches for insertion of 1 1/2 inch HDPE lighting conduit and 2 1/2 inches for insertion of 1 1/2 inch HDPE CCTV conduit. Raceways shall exit the foundation into the soil at 30 inches below the grade.

602.5 LUMINAIRES

602.5.1 COBRA HEAD TYPE LUMINAIRES

Cobra head type luminaires shall be:

a) The housing shall be die cast aluminum adjustable for arms from 1 1/4 inch to 2” diameter.

b) The luminaire shall have driver with variable voltage range between 120-277 volts and operate at 120 volt connection.

c) Luminaire shall be equipped with a 7-pin twist lock photocell receptacle.

d) Luminaire shall be equipped with a utility wattage label.

e) Luminaire color shall match pole color.

f) See “Design Manual For Public Improvements Section 4.5 Street Lighting: for luminaire manufacturer and model number.

602.5.2 SIDE MOUNT AREA TYPE LUMINAIRES
Side Mount area type luminaires shall be:

a) The luminaire shall be cast aluminum side mounted to pole with universal mounting arm.

b) The luminaire shall have driver with variable voltage range between 120-277 volts and operate at 120 volt connection.

c) Luminaire shall be equipped with a 7-pin twist lock photocell receptacle.

d) Luminaire color shall match pole color.

e) See “Design Manual For Public Improvements Section 4.5 Street Lighting: for luminaire manufacturer and model number.

602.5.3 CAGED ACORN TYPE LUMINAIRES
Caged acorn type luminaires shall be:

a) The luminaire shall be cast aluminum post top mounted to pole with 3 inch slip fitter.

b) The luminaire shall have driver with variable voltage range between 120-277 volts and operate at 120 volt connection.

c) Luminaire shall be equipped with a 7-pin twist lock photocell receptacle with an acrylic cupola.
d) Luminaire housing shall have custom “Naperville” logo on four sides.

e) Luminaire color shall match pole color.

f) See “Design Manual For Public Improvements Section 4.5 Street Lighting: for luminaire manufacturer and model number.

602.6 PHOTO-CELL
Photo cells shall be Acuity DLL127-F-1.5-GR (green) with time delay and pointed photo-electric controls (photo cells) cover unless otherwise approved equal by the City Engineer.

Photo-electric control, dual volt, locking type (twist lock) must meet or exceed the following requirements:

a) ANSI C136.10.

b) Line voltage Operating Range of 105 to 305 VAC at 60 Hz.

c) Load Rating of 1000 watts tungsten and 1800 volt-amp ballast.

d) Failure mode (per ANSI) shall be to “on” mode.

e) LED inrush protection with triac assisted relay.

f) Turn “on” mode calibrated at 1.5 +/- 0.3 foot candles at 120 VAC with turn “off” at 2.25 foot candles and maximum ratio to turn “on” of 1.5:1.

g) Time delay: Control shall have an instantaneous “on” response to allow for easy testing. Operating temperature shall have a minimal effect on time delay duration.

h) Surge protection shall be in the form of a Metal Oxide Varistor (MOV) wired line to neutral. MOV shall be a minimum of 320J/9.5kA. Secondary surge protection across the electronic circuit is required.

i) Calibration: Each unit shall be calibrated in production using a photometer whose accuracy is traceable to the NIST. A quality control inspection shall be performed after calibration and final assembly.

j) Contact “Chatter” on opening of contacts (TURN OFF of photoelectric control) shall not exceed 6 milliseconds.

k) Housing strength: The cover of the photo-electric control shall be of an impact and UV resistant material. Impact resistance of greater than 1.0 ft-lbs over the intended operating temperature range of the device is required.

l) Drop Test: The photoelectric control must be capable of withstanding a drop of 3 feet to a concrete floor without causing damage to the housing and without changing the electrical operation.

m) Housing Size: The diameter of the photo-electric control skirt shall be a minimum of 3 inches.

n) Plug blades shall be 3-prong, of brass construction and of the locking-type.

o) Markings: The following information shall be marked upon the exterior of the photo-electric control upon the base: month and year of manufacture, individual serial numbers, complete model description, operating voltage range, load rating, and provisions for marking installation and removal dates.

p) Warranty: The warranty for the photo-electric control shall be a minimum of 10 years.

602.7 UNDERGROUND CONDUITS AND ELECTRICAL CABLE

Wiring to distribute electrical energy to street lighting shall be installed underground. All wiring and cabling shall be copper conductor. All conduit installed in parkways shall be installed a minimum of 30 inches below grade to top of conduit. All conduit installed under pavement shall be installed a minimum of 36 inches below bottom of curb to top of conduit.

602.7.1 HDPE CONDUIT, 1 1/4 INCH, WITH 4/C - #6 XLP USE-2 CABLE (NON-CBD)

Unless otherwise directed by the City Engineer, the electrical distribution wiring for street lighting from the service point to the pole for individually fed lights and from the controller out to the poles for a street lighting system shall be 4/C - #6 XLP USE-2 electrical cable (colored insulated jacket of black, white, red, and green), 600 volt in 1 1/4 inch Sch40 HDPE conduit installed in accordance with Sections 1066 and 1088 of the IDOT Standard Specifications.

602.7.2 HDPE CONDUIT, 1 1/2 INCH, WITH 7/C - #6 XLP USE-2 CABLE (CBD)

Unless otherwise directed by the City Engineer, the electrical distribution wiring for street lighting from the concrete handholes out to the poles for a street lighting system shall be 7/C - #6 XLP USE-2 electrical cable (colored insulated jacket of (2) black, (2) white, (2) red and (1) green)), 600 volt in 1 1/2 inch Sch40 HDPE conduit installed in accordance with Sections 1066 and 1088 of the IDOT Standard Specifications.

602.7.3 HDPE CONDUIT, 2 1/2 INCH, WITH TWO SETS OF (7/C - #6 XLP USE-2 CABLE) (CBD)

Unless otherwise directed by the City Engineer, the electrical distribution wiring for street lighting from the controller to adjacent concrete handhole, and between concrete handholes for a street lighting system shall be two sets of (7/C - #6 XLP USE-2 electrical cable (colored insulated jacket of (2) black, (2) white, (2) red and (1) green), 600 volt) in 2 1/2 inch Sch40 HDPE conduit installed in accordance with Sections 1066 and 1088 of the IDOT Standard Specifications.

602.7.4 HDPE CCTV / OTHER CONDUIT, 1 INCH, 1 1/2 INCH OR 2 INCH (CBD)

Unless otherwise directed by the City Engineer, the CCTV conduit shall be as follows:
2 inch Sch40 HDPE conduit from the controller to adjacent concrete handhole; 1 1/2 inch Sch40 HDPE conduit between the 10 foot light poles; 1 inch Sch40 HDPE conduit between 30 foot light poles. Conduit shall be installed in accordance with Sections 1066 and 1088 of the IDOT Standard Specifications. All CCTV /other conduits shall be provided with a tonable pull string.

602.7.5 RIGID GALVANIZED STEEL CONDUIT, 2 INCH, WITH 3/C - #2 XLP USE-2 CABLE (NON-CBD)

Unless otherwise directed by the City Engineer, the service distribution wiring between the NDPU-E electrical (or ComEd) service point and a street lighting system controller shall be 3/C - #2 XLP USE-2 electrical cable (colored insulated jacket of black, white, and red), 600 volt in 2 inch rigid galvanized conduit in accordance with Sections 1066 and 1088 of the IDOT Standard Specifications.

602.7.6 RIGID GALVANIZED STEEL CONDUIT, 2 1/2 INCH, WITH 3/C - #3/0 XLP USE-2 CABLE (CBD)
Unless otherwise directed by the City Engineer, the service distribution wiring between the NDPU-E electrical (or ComEd) service point and a street lighting system controller shall be 3/C - #3/0 XLP USE-2 electrical cable (colored insulated jacket of black, white, and red), 600 volt in 2 1/2 inch rigid galvanized conduit in accordance with Sections 1066 and 1088 of the IDOT Standard Specifications.

602.7.7 RIDGID GALVANIZED STEEL CONDUIT SLEEVE – 2 1/2 INCH, 4 INCH, 5 INCH, OR 6 INCH
Where underground street lighting cables cross public streets or commercial driveways, all HDPE conduit shall be installed in an appropriate sized galvanized steel conduit sleeve. The galvanized steel conduit shall be in accordance with Section 1088 of the IDOT Standard Specifications.

602.8 ELECTRICAL CABLE, 600 VOLT
The material supplied shall be XLP USE-2, 600 volt cable (colored insulated jacket of black, white, red, and green) of the specified number of conductors and be in accordance with Section 1066 of the IDOT Standard Specifications.

602.8.1 POLE WIRE
Pole Wire shall be 2/C No. 10 AWG 600 volt insulated copper conductor, XLP USE-2, stranded in conformance with ASTM B-8 from the luminaire terminal blocks to the pole handhole. Connection of pole wire to the terminals in the street lighting luminaire is incidental to the installation of the pole wire.

a) Pole wire shall be black and white colored insulation. The wire is to run inside the pole and mast arm.

602.8.2 SPLICING
Splicing of Electrical Cable shall be in accordance with Article 1066.06 of the IDOT Standard Specifications with the following additional requirements (Detail 690.23).

a) Splices shall be above grade, such as in poles and junction boxes. Splices shall be irreversible compression type with a waterproof sealant and a heat-shrinkable plastic cap. The cap shall be of a size suitable for the splice and shall have a factory-applied sealant within.

b) Additional seal of the splice shall be assured by the application of rubber sealant tape or the use of a sealant putty insert prior to the installation of the cap. Either method shall be assured compatible with the cap sealant.

c) Tape sealant shall be applied in not less than one half-lapped layer for a length of at least 1/4 inch longer than the cap length and the tape shall also be wrapped into the crotch of the

splice. Insert sealant shall be placed between the wires of the splice and shall be positioned to line up flush or extend slightly past the open base of the cap.

602.9 LIGHTING CABLE FUSE KITS

In-line fuse holder(s) and fuse(s) on all leads shall be in accordance with Article 1065.01 of the IDOT Standard Specifications and as follows (Detail 690.23):

a) Fuse holders of the in-line quick disconnect breakaway type shall be used on all light pole installations in the base of each lighting standard. The fuse holder shall have a minimum rating of 30 amps and be sized for 13/32 inch x 1 1/2 inch fuses. Fuse holder shall be Bussman HEB-AW-RLC-A 30 ampere 600 volt for phase wire and HET-AW-RLC-A for neutral wire or approved equal by the City Engineer.

b) Wires shall be carefully stripped only as far as needed for connection to the device. Over-stripping shall be avoided. An oxide inhibiting lubricant shall be applied to the wire for minimum connection resistance before the terminals are crimped-on.

c) Crimping shall be performed in accordance with the fuse holder manufacturer's recommendations.

d) The exposed metal connecting portion of the assembly shall be taped with two half-lapped wraps of electrical tape and then covered by the specified insulating boot.

e) The fuse holder shall be installed such that the fuse side is connected to the pole wire (load side) and the receptacle side of the holder connected to the line side.

f) In-line fuse holder(s) shall be provided on all neutral conductors with a solid slug in place of the fuse in the base of each lighting standard.

g) Fuses for fuse holders on line/load cable to pole wire connection shall be time delay, rated for 10 ampere, Type MEQ or MEM, or approved equal by the City Engineer.

602.10 CAST-IN PLACE CONCRETE HANDHOLES

For traffic signals, only cast-in place concrete handholes shall be used unless otherwise approved by City Engineer. For Street lighting, Cast-in place concrete handholes shall be used on the far side of any street crossing opposite a street lighting controller, adjacent a street lighting controller in CBD areas, or as specified by the City Engineer. Street lighting handholes shall be in accordance with Article 1088.06 the IDOT Standard Specifications with the following provisions (Detail 690.17):

a) The handhole shall be poured in place concrete with 8 inch thick wall and inside dimensions of 21 1/2 inches. Frames and lid openings shall match this dimension. Hinged lids shall not be used. The legend "STREET LIGHTING" shall be cast in the lid.

b) All conduits shall enter the handhole at depth of at least 30 inches.

c) Cable hooks are required, one per side of handhole. All cable hooks are to be hot-dipped galvanized in accordance with AASHTO Specification M 111.

d) Frame and lid shall be bounded to equipment grounding conductor with a 1/C 600 volt insulated copper conductor, XLP USE-2, sized to match circuit conductor.

602.11 COMPOSITE CONCRETE HANDHOLE

Composite concrete handholes shall be in accordance with Articles 1004.05 and 1088.05 of the IDOT Standard Specifications (Detail 690.18). The size shall be a minimum of 11 inches x 18 inches x 18 inches deep gasketed box with open base. The junction box shall be:

a) Hubbell-Quazite or Oldcastle-Duralite, unless otherwise specified in the plans and approved equal by the City Engineer. The box and cover shall meet/exceed ANSI Tier 15 loading requirements and be tested in accordance with the latest edition of the ANSI/SCTE 77 "Specifications for Underground Enclosure Integrity", and the provisions of Paragraph 5.2.3 and 5.2.4 of Western Underground Committee Guide 3.6. The cover shall bear a legend of "STREET LIGHTING". There shall be no holes cut into the sides of the junction box without approval from the City Engineer.

602.12 GROUNDING

Street lighting grounding equipment shall be in accordance with Section 1087 of the IDOT Standard Specifications with the following provisions:

a) Metal poles installed on metal foundations do not require a separate ground rod installation.

b) Metal light poles installed connected directly to a Naperville Department of Public Utilities-Electric (NDPU-E) service point shall have a green 1/C #6 XLP/USE-2 bonding jumper installed between the pole grounding lug and the neutral conductor splice.

c) Metal light poles installed on a controller circuit shall have a 1/C XLP/USE-2 bonding jumper installed between the pole grounding lug and the equipment ground conductor splice sized to match equipment ground conductor.

602.13 GROUND ROD

Installation of ground rods are required for the grounding of electrical services and for supplementing the equipment grounding system via connection at poles or other equipment throughout the street lighting system. All materials shall be in accordance with Article 250 of the NEC.

a) Grounding for concrete foundation street lighting poles shall be by installation of the ground rod embedded into the concrete foundation projecting out into the ground, and connection by bare cable in accordance with the provisions of the IDOT Standard Specifications to the lighting system green 1/C #6 ground cable. A ground rod is not required for metal helix foundations.

b) Grounding for controller cabinets shall be by installation of a ground rod in the concrete foundation projecting out into the ground and connected to the ground terminal bar in the cabinet by bare cable in accordance with the provisions of the IDOT Standard Specifications.

c) Where connections to ground rods are made to insulated conductors, the connection shall be wrapped with at least four layers of electrical tape extending 6 inches below finished grade.

602.14 STREET LIGHTING CONTROLLER

This item shall consist of furnishing and installing a roadway lighting electrical control cabinet complete with foundation and wiring for control of roadway lighting as specified herein and as directed by the City Engineer. Unless otherwise indicated, the cabinet, including all components, shall be new. Controllers located in the Central Business District shall provide separate circuits and contactors for roadway, pedestrian, and holiday lights as specified herein and the City of Naperville CBD specifications. Component make/model numbers listed below (or approved equal by the City Engineer) shall be provided. The street light controller shall be actuated by a remotely mounted photocell mounted on the first pole next to the controller, which will operate through an auxiliary on-delay relay to pick up the controller's main mechanically held contactor. The operation of the photocell will insure that the street light circuits are energized during nighttime hours and de-energized during daytime hours. Non-CBD controllers shall be 100 ampere120/240 volt single phase (Detail 690.21). CBD lighting controllers shall be 225 ampere 120/240 volt single phase (Detail 690.22).

602.14.1 STREET LIGHTING CABINET

a) The cabinet shall be a ground mounted and shall be 30 inches width by 50 inches in height by 16.5 inches depth and shall be fabricated from aluminum alloy of 0.125 inches in thickness. The surfaces shall have a smooth, natural aluminum finish. A 9" wide by 3" high adhesive label shall be placed on back exterior of the cabinet near the top left (Detail 690.10).

b) The main door shall be NEMA type construction with a cellular neoprene gasket which is rain and dirt tight without louver slots in the lower portion of the door to exclude the entry of moisture, dirt, and insects. Hinges are 14 gauge stainless steel. Standard equipment includes a three point locking system which secures the door at the top, bottom, and center. A Corbin lock with two keys shall be furnished. The main door shall be equipped with a two position door stop, one stop at 90 degrees and the other at 120 degrees. A nameplate with the legend "Street Lighting City of Naperville" shall be fabricated and mounted on the main door. Below the nameplate, a 2nd plate with the legend "Contact the Department of Public Works at (630) 420-6187 to report problems" shall be mounted.

c) The cabinet shall be equipped with a vent in the underside of the overhang above the cabinet door, which is designed to resist moisture, dirt, and insects.

d) The equipment mounting panel shall be made of 1/2 inch minimum melamine-faced solid phenolic laminate impregnated with thermosetting resins and shall be drilled and tapped

for front mounting of the equipment. The panel shall be easily installed and removed from the front of the panel.

602.14.2 CONTROLLER FOUNDATION

a) The foundation shall be furnished and installed in place per the dimensions shown in the Street Lighting Controller Details 690.21 and 690.22.

b) The anchor bolts shall comply with ASTM A576. The anchor bolts, nuts and washers shall be hot dipped galvanized steel according to ASTM 153. There shall be a minimum of 4 anchor bolts for each controller.

c) The 100 ampere (NON-CBD) controller foundation shall include a 2 inch galvanized steel conduit raceway for the service, four 2 1/2 inch Sch40 PVC raceways (for 1 1/4 inch HDPE lighting ducts), and two spare raceways of 2 1/2 inch Sch40 PVC.
The 225 ampere (CBD) controller foundation shall include a 2 1/2 inch galvanized steel conduit raceway for the service, two 4 inch Sch40 PVC raceways (for 2 1/2 inch HDPE lighting ducts), four 3 inch Sch40 PVC raceways (for 2 inch HDPE CCTV ducts), and one 2 ½ inch Sch40 PVC raceway (for 1 ½ inch HDPE fiber duct).

d) The foundation shall include a copper coated steel ground rod 3/4 inch in diameter and 10 feet in length, including copper bonding wire as shown in Street Lighting Controller Details.

602.14.3 CONTROLLER EQUIPMENT (100A – NON-CBD)
The controller must include the following:

a) Main circuit breaker: 2 pole, 240 volt, 100 ampere, 65KAIC (Eaton ED2100L)

b) Lamp/Heater circuit breaker: 1 pole, 120 volt, 15 ampere, 14KAIC (Eaton EHD1015)

c) Photoelectric control circuit breaker: 1 pole, 120 volt, 15 ampere, 14KAIC (Eaton EHD1015)

d) Auxiliary relay: DPDT, 120 volt, 10 ampere, on-delay, 8-pin octal base, (NTE R28-11A10-120L)

e) Cabinet receptacle and box: 20 ampere, 120 volt, duplex, GFCI, ivory, (Hubbell GFRST20I), Intermatic B-5V and FG-1-DCV

f) Cabinet light: LED vaporproof light fixture of the enclosed and gasketed type, 16W, 4000K, (RAB Lighting VXLED13NDG-3/4)

g) Contactor: 2 pole, single throw, electrically operated and mechanically held remote switch, 120 volt coil, 100 ampere (Square D 8903SQO10V02)

h) Branch line circuit breakers (8) : 1 pole, 120 volt, 30 ampere, 14KAIC (Eaton EHD1030)

i) Surge arrestor: (Square D SDSA1175)

j) Door switch: 20 ampere, (Honeywell BA-2RQ1-A2)

k) Hand-Auto-Off Control switch: 20 ampere, 120 volt, (Square D manual return 9001KYK111) Cast aluminum enclosure

l) Photocell terminal block: 30 ampere, 250 volt, 3 terminals, (Cinch 3-142)

m) Thermostat: Integral to heater

n) Cabinet heater: 200 watt, fully enclosed, fan driven(Hoffman DAH2001A)(shall not be mounted to equipment mounting panel)

o) Neutral bus bar: 1/4 inch copper by 1 inch by 12 inches, color coded white, labeled "neutral"

p) Ground bus bar: 1/4 inch copper by 1 inch by 12 inches, color coded green labeled "ground".

q) Secondary pedestal shall be installed by the Naperville Department of Public Utilities - Electric

602.14.4 CONTOLLER EQUIPMENT (225A CBD)
The controller must include the following:

a) Main circuit breaker: 2 pole, 240 volt, 225 ampere, 65KAIC (Eaton ED2225L)

b) Lamp/Heater circuit breaker: 1 pole, 120 volt, 15 ampere, 14KAIC (Eaton EHD1015)

c) Photoelectric control circuit breaker: 1 pole, 120 volt, 15 ampere, 14KAIC (Eaton EHD1015)

d) Auxiliary relay: DPDT, 120 volt, 10 ampere, on-delay, 8-pin octal base, (NTE R28-11A10-120L)

e) Cabinet receptacle and box: 20 ampere, 120 volt, duplex, GFCI, ivory, (Hubbell GFRST20I), Intermatic B-5V and FG-1-DCV

f) Cabinet light: LED vaporproof light fixture of the enclosed and gasketed type, 16W, 4000K, (RAB Lighting VXLED13NDG-3/4)

g) Contactors (2): 2 pole, single throw, electrically operated and mechanically held remote switch, 120 volt coil. (1) 60 ampere (Square D 8903SPO10V02) and (1) 100 ampere (Square D 8903SQO10V02)

h) Surge arrestor: (Square D SDSA1175)

i) Door switch: SPST 20 ampere, (Honeywell Micro BA-2RQ1-A2)

j) Hand-Auto-Off Control switches (2): 20 ampere, 120 volt, (Square D manual return 9001KYK111) Cast aluminum enclosure

k) Photocell terminal block: 30 ampere, 250 volt, 3 terminals, (Cinch 3-142)

l) Branch line circuit breakers (8): 1 pole, 120 volt, 30 ampere, 14KAIC (Eaton EHD1030)

m) Thermostat: Integral to heater

n) Cabinet heater: 200 watt, fully enclosed, fan driven(Hoffman DAH2001A)(shall not be mounted to equipment mounting panel)

o) CCTV circuit breakers (2): 1 pole, 120 volt, 20 ampere, 14KAIC (Eaton EHD1020)

p) Neutral bus bar: 1/4 inch copper by 1 inch by 12 inches, color coded white, labeled "neutral"

q) Ground bus bar: 1/4 inch copper by 1 inch by 12 inches, color coded green labeled "ground".

r) Secondary pedestal shall be installed by the Naperville Department of Public Utilities - Electric

602.14.5 SERVICE TO STREET LIGHTING CONTROLLER

a) This section includes the installation of conduit and wire from the secondary pedestal to the street lighting controller. The secondary pedestal is installed by the Naperville Department of Public Utilities – Electric at a minimum of 5 feet from the NDPU-E service point.

b) The service wiring from the secondary pedestal to the street lighting controller shall be 3/C - #2 XLP/USE-2 colored insulation of black, red, and white in 2 inch galvanized steel conduit for 100 amp controllers; and 3/C - #3/0 XLP/USE-2 colored insulation of black, red, and white in 2 1/2 inch galvanized steel conduit for 225 amp controllers.

c) A metallic threaded bushing with lug shall be installed on the galvanized steel conduit for the service and connected by a 1/C #6 XLP/USE-2 cable (green) to the ground rod.

d) A minimum of 8 feet of service conductors shall be provided (and coiled up) at the secondary pedestal for the purpose of making the connections to the source by NDPU-E.

602.14.6 BUS BARS

All bus bars shall be of a size to handle the rated current of the connected equipment. Exposed bus bars shall be insulated, except for ground and neutral bus bars.

Separate ground and neutral bus bars shall be provided. The ground bus bar shall be copper and mounted on the equipment panel. The neutral bar shall be similar. The heads of the screws shall be painted white for the neutral bar and green for the ground bar. Ground and neutral bus bars shall have a minimum of 8 additional terminations than shown in the details.

602.14.7 WIRING AND IDENTIFICATION

a) All wiring shall be of a size to handle the rated current of the connected equipment.

b) Power wiring within the cabinet shall be of the size specified for the corresponding service conductors and branch circuits and shall be rated RHH/RHW or MTW, 600 volts.

c) Control and auxiliary wiring shall be a minimum of #12 copper and rated MTW with jacket, 600 volt, stranded copper of appropriate colored insulation of red, black, white, and green.

d) All power and control wiring shall be tagged with self-sticking cable markers and shall be stranded copper.

e) All switches, controls and the like shall be identified as to function and position (as applicable) by means of engraved 2 color nameplates attached with screws.

602.14.8 CIRCUIT BREAKERS

a) All feeders, branch circuits, and auxiliary and control circuits shall have over current protection per the requirements of the NEC and as shown on the engineering plans. The over current protection shall be by means of circuit breakers.

b) Circuit breakers shall be standard UL-listed molded case, thermal magnetic “I-Line” breakers with trip free indicating handles with terminals adequate for #6 single conductor copper cable.

c) Circuit breakers shall have a UL-listed interrupting rating of not less than 14,000rms symmetrical amperes at rated voltage.

d) The branch circuit breakers shall be as specified on the circuit schematic with circuits identified with labels.

602.14.9 CONTACTOR(S)

a) The contactor shall be electrically operated, mechanically held, with the number of poles required for the service and with 120 volt operating coil voltage as indicated or otherwise required.

b) Contactor(s) shall be complete with a non-conducting inorganic, non-asbestos sub-panel for mounting.

c) Contactor(s) shall be mechanically held, and shall be complete with coil-clearing contacts to interrupt current through the coil once the contactor is held in position.

d) The main contactor contacts shall be double break, silver to silver type. They shall be spring-loaded and provide a wiping action when opening and closing. The contacts shall be renewable from the front panel, self-aligning, and protected by auxiliary arcing contacts.

e) The line and load terminals shall be pressure type terminals of copper construction and of the proper size for the ampere rating of the contactor.

f) The contactor operating coil shall be rated for nominal 120 volt, single phase.

g) Protection from accidental contact with current carrying parts shall be provided when operating the contactor manually.

h) Contactors shall be clearly marked to indicate whether they are in the open or closed position.

602.14.10 AUTO/MANUAL CONTROL

a) The cabinet shall be equipped with automatic and manual operating controls via a 3 position (Hand-Auto-Off) switch. The switch shall be premium specification grade, rated for the applied duty, but not less than 20 amperes at 120 volts and shall be mounted in a 4 inch square box with cover.

b) The cabinet control and auxiliary device circuit shall have over current protection as indicated and as required by NEC.

c) Each street lighting controller shall be wired to an individual photocell located on top of the nearest street light pole. The photocell shall operate at 120 volts, 60 Hertz, AC, and be rated at 1,000 watts. The photocell shall be grounded to the luminaire. The photocell shall be wired to the street lighting controller in HDPE conduit, 1 1/4 inch minimum size, 3/C - #10, 600V, XLP/USE-2 of colored insulation of red, black, and white, if the cabling to the photo-cell cannot be pulled into a field circuit conduit.

602.14.11 INTERIOR LIGHTING AND RECEPTACLE

a) The auxiliary device circuit shall provide 120 volts single phase to supply the convenience receptacle and cabinet light.

b) The cabinet shall be equipped with an interior LED lighting fixture of the enclosed and gasketed type switched from a momentary single pole, single throw, 20 amperes switch. The switch shall be door activated.

c) The cabinet shall be equipped with a 120 volt, 20 ampere G.F.C.I. duplex receptacle, premium specification grade in a 4 inch square box with a cover.

d) The cabinet shall be equipped with a heater that shall maintain the temperature within the cabinet at a minimum of 40 degrees Fahrenheit.

602.14.13 TESTING OF THE ASSEMBLED CABINET
Prior to shipment of the completed cabinet, the control cabinet shall be tested for load, short circuits and complete operation of the cabinet as specified herein and as shown on the plans.

602.14.14 ACCEPTANCE AND CONNECTION
Upon final inspection and approval of the street lighting system by the Naperville Department of Transportation, Engineering & Development, NDPU-E will provide all labor and material necessary to provide 120/240 volt, single-phase, electrical service connection at the service point.

602.15 LABELS
This work shall consist of furnishing and affixing the City of Naperville G.I.S. Street lighting identification number to each street lighting pole or controller installed. This work shall be performed in accordance with the following provisions (Detail 690.11):

a) The identification number label for non-CBD poles shall consist of a white background of 3” wide by 17” high. A 2 inch by 2 inch black Naperville logo 1/2 inch below top of label with six (6) red numbers below. The numbers are arranged vertically, each 1 1/2” in height, spaced 3/4” apart on with 1 1/4” between the top number and logo, and 1/2” between the bottom number and the bottom of the label. The numbers shall be Standard Alphabets for Highway Signs, FHWA, of “C” brush stroke width.

b) The identification number label for CBD poles shall consist of a white background of 1 5/8” wide by 10” high. A 1 1/8 inch by 1 1/8 inch black Naperville logo 1/4 inch below top of label with six (6) black numbers, arranged vertically, each 7/8” in height, spaced 3/8” apart with 1 1/8” between the top number and logo and 3/8” between the bottom of the bottom number and the bottom of the label. The numbers shall be Standard Alphabets for Highway Signs, FHWA, of “C” brush stroke width.

c) The identification number label for controllers shall consist of a white background of 9” wide by 3” high. A 2 1/2 inch by 2 1/2 inch black Naperville logo 1/4 inch from left side

of label with four (4) black numbers to the right. The numbers are centered arranged horizontally, each 2" in height, evenly spaced 1/4" from, top of label. The "City of Naperville" shall be spelled out below the 4 numbers each 3/8" high centered left-right. The numbers/letters shall be Standard Alphabets for Highway Signs, FHWA, of "C" brush stroke width.

d) The numbers and the background shall be retro reflective sheeting meeting the requirements for Engineer Grade Sheeting, Type B Reflective Sheeting per Section 1091 of the IDOT Standard Specifications. The material for the background shall be pressure sensitive 3M Control Tack.

e) See light pole and controller detail drawings for locations and orientations. Coordinate pole and controller numbers with the City.

603 CONSTRUCTION REQUIREMENTS

The overall street lighting and traffic signal general electrical requirements shall comply with Section 801 of the IDOT Standard Specifications.

603.1 TRAFFIC SIGNAL SYSTEMS CONTRACTOR PRE-QUALIFICATIONS

All contractors working on traffic signals under City of Naperville jurisdiction shall be pre-qualified for traffic signal work with the Illinois Department of Transportation in accordance with the IDOT Standard Specifications.

603.2 TRAFFIC SIGNAL SYSTEMS

All traffic signal related items shall meet IDOT Standard Specifications, IDOT District 1 Traffic Signal Specifications, or City of Naperville Standards as determined by the City Engineer.

603.3 TRENCH AND BACKFILL FOR ELECTRICAL WORK

Constructing a trench for the accommodation of conduit and backfilling shall be carried out in accordance with the Article 810.04(a) of the IDOT Standard Specifications. The conduit shall not be less than 30 inches deep.

603.4 YELLOW WARNING TAPE OVER STREET LIGHTING CABLE

A 6 inch wide yellow warning tape shall be installed over the street light duct at <u>all</u> locations where new cable is placed by the trench and backfill method. The warning tape shall be placed approximately 1 foot below grade.

603.5 TRAFFIC SIGNAL SYSTEM SERVICE INSTALLATION

Electrical service for traffic signals is to be provided by NDPU-E from a pad-mounted transformer.

The Contractor shall install a meter socket, Milbank #NU8980-0-KK supplied by the Contractor. The Milbank shall be located as shown in the plans. The meter shall be supplied and installed by NDPU-E.

Standard service shall be 120/240 volt, single phase, 3 wire between the service point and the Milbank (meter) and shall be 120 volt, single phase, 4 wire between the Milbank (meter) and the traffic signal controller cabinet. The contractor is to contact NDPU-E Engineering Department for Specifications if another service voltage is required.

The Contractor shall install #6 CU, STR, XLP, U.S.E., 600 volt cable (color coded black, white, and red) in 2 inch galvanized steel conduit between the meter socket and the service connection point. For underground service connections, the service conductors and conduit shall extend to within 2 feet of the service connection point. The Contractor shall coil 8 feet of 3C cable at the connection point for NPDU-E personnel to make the hook-up. The conductor shall be sealed, for overhead service connections, unit duct and service conductors shall be attached to utility pole and up to a minimum of ten feet above grade. The service conductors shall be coiled to provide a minimum of 20 feet of available conductor. The conductor shall be sealed.

A schematic detail drawing illustrating the connection to the Milbank and the traffic signal controller is shown as detail 690.24.

The entire installation will be grounded in a manner satisfactory to NDPU-E and to the City Engineer.

603.6 CONDUIT
Conduit shall be installed in accordance with Sections 810, 811 and 812 of the IDOT Standard specifications.

603.7 WIRE AND CABLE
Wire and cable shall be installed in accordance with Sections 816 and 817 of the IDOT Standard specifications. 8 feet of cable shall be coiled up at secondary pedestals for NDPU-E to connect.

603.8 LUMINAIRES
Luminaires shall be installed in accordance with Section 821 of the IDOT Standard specifications.

603.9 LIGHT POLES AND BREAKAWAY DEVICES
Light poles and breakaway devices shall be installed in accordance with Sections 830 and 838 of the IDOT Standard specifications.

603.10 FOUNDATIONS
Concrete and metal helix foundations shall be installed in accordance with Sections 830 and 836 of the IDOT Standard specifications.

603.11 HANDHOLES
Handholes shall be installed in accordance with Section 814 of the IDOT Standard specifications.

604 INSPECTIONS AND TESTING

604.1 STREET LIGHTING SYSTEMS

New or reinstalled street lights must be inspected by the city's Inspection Team prior to electrical hook-up and before their acceptance. The contractor should contact the Transportation, Engineering and Development Business Group Inspection Dispatch at (630) 420-6082 to schedule an inspection. The inspection must be scheduled at least 72 hours in advance. Testing shall be in accordance with article 801.13(a) of the IDOT Standard specifications. Upon initial inspection approval, the contractor should then call City Dispatch at (630) 420-6187 to schedule an electrical hook-up with NDPU-E. The request must be scheduled at least 72 hours in advance. Once energized the contractor should call City Dispatch to schedule a night run inspection for final acceptance.

604.2 TRAFFIC SIGNAL SYSTEMS

604.2.1 CONCRETE

All concrete work associated with the installation of a traffic signal must be tested by the contractor. Test results shall be provided to City indicating specified strength at 14 days meets IDOT requirements for class SI concrete.

604.2.2 FIELD INSPECTION

A field inspection is required prior to maintenance transfer of a signal from the contractor to the city. It is the intent to have all electrical work completed and equipment field tested by the vendor prior to the city's "turn-on" field inspection. If in the event the City Engineer determines work is not complete and the inspection will require more than two hours to complete, the inspection shall be cancelled and the contractor will be required to reschedule at another date. The maintenance of the traffic signals will not be accepted until all punch list work is corrected and re-inspected.

When the road is open to traffic, except as otherwise provided in the IDOT Special Provisions, the contractor may request a turn-on and inspection of the completed traffic signal installation at each separate location. This request must be made to the City Engineer at (630) 420-6100 a minimum of 7 working days prior to the time of the requested inspection. The city will not grant a field inspection until written certification is provided by the contractor and the equipment has been field tested and the intersection is operating according to contract requirements.

690 STANDARD DETAILS

Structures

690.01 Davit Arm Street Light Detail – 23 Foot
690.02 Davit Arm Street Light Detail – 32 Foot
690.03 Twin Davit Arm Street Light Detail – 32 Foot
690.04 Truss Arm Street Light Detail – 32 Foot
690.05 Twin Truss Arm Street Light Detail – 32 Foot
690.06 Truss Arm Street Light Detail – 40 Foot
690.07 Truss Arm Street Light Detail – 47.5 Foot
690.08 Twin Truss Arm Street Light Detail – 47.5 Foot
690.09 Caged Acorn Street Light Detail – 10 Foot (CBD Only)
690.10 Side Mount Street Light Detail – 30 Foot (CBD Only)
690.11 Light Pole and Controller Labeling Detail
690.12 Metal Helix Pole Foundation Detail (2 Sheets)
690.13 Concrete Pole Foundation Detail – 18 Inch Diameter (CBD Only) (2 Sheets)
690.14 Concrete Pole Foundation Detail – 24 Inch Diameter (2 Sheets)
690.15 Offset Concrete Pole Foundation Detail – 24 Inch Diameter (2 Sheets)
690.16 Breakaway Transformer Base Detail
690.17 Cast-in Place Concrete Handhole Detail
690.18 Composite Concrete Handhole Detail

Electrical

690.21 Street Lighting Controller Details– 100A (3 sheets)
690.22 Holiday Lighting Controller Details– 225A (3 Sheets) (CBD Only)
690.23 Typical Street Light Connection Detail (3 Sheets)
690.24 Service Connections

Conduit & Trenching

690.30 Typical Trench Detail

690.99 COMMON NAMES

All standard details in this section may be referred to by a common name in associated construction documents. The common name shall be “LIGHTING xx” where the xx is the section of the detail number to the right of the decimal point. For instance, *Detail #690.01 DAVIT ARM STREET LIGHT DETAIL – 23 FOOT* may also be referred to as “LIGHTING 1”.

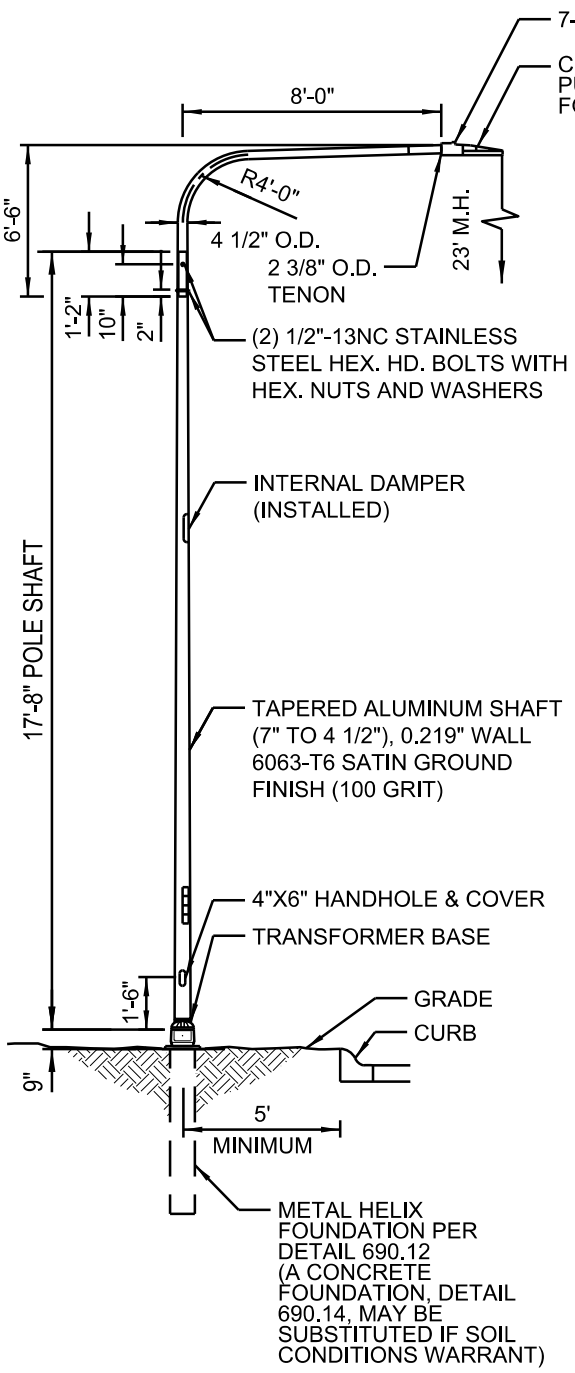

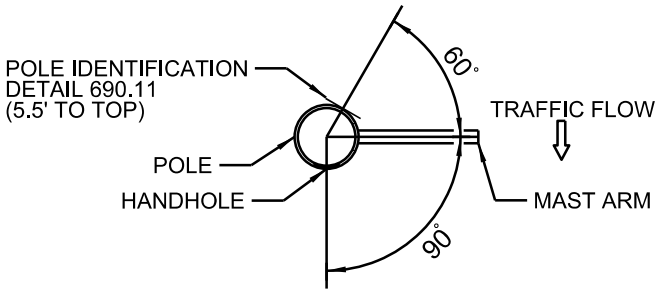

MAST ARM & HANDHOLE ORIENTATION

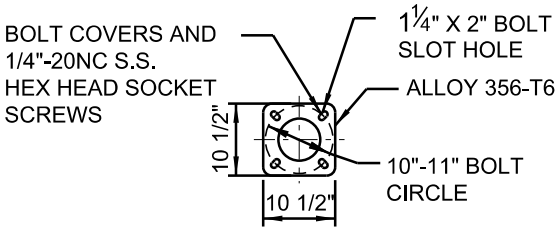

BASE PLATE

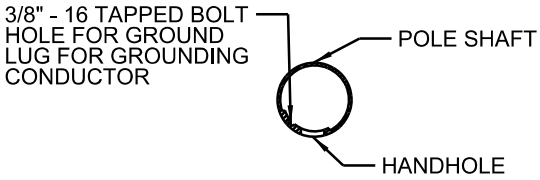

HANDHOLE DETAIL

NOTES:

1. COMPLETE ASSEMBLY POWDER COATED TEXTURED DARK BRONZE, HAPCO, VALMONT OR APPROVED EQUAL.
2. POLE IS UL CLASSIFIED WITH UL LABEL AND HANDHOLE COVER GASKET COMPLYING WITH UL 1572.
3. POLE DESIGN MEETS LATEST AASHTO SPECIFICATION FOR 90 MPH WIND WITH A LUMINAIRE HAVING A MAXIMUM EPA OF 1.6 SQ. FT. AND WEIGHING 75 LBS.

City of Naperville STANDARD DETAIL	DAVIT ARM STREET LIGHT DETAIL - 23 FOOT	LIGHTING 1
	EFFECTIVE: 4/20/2020 — SHEET 1 OF 1	690.01

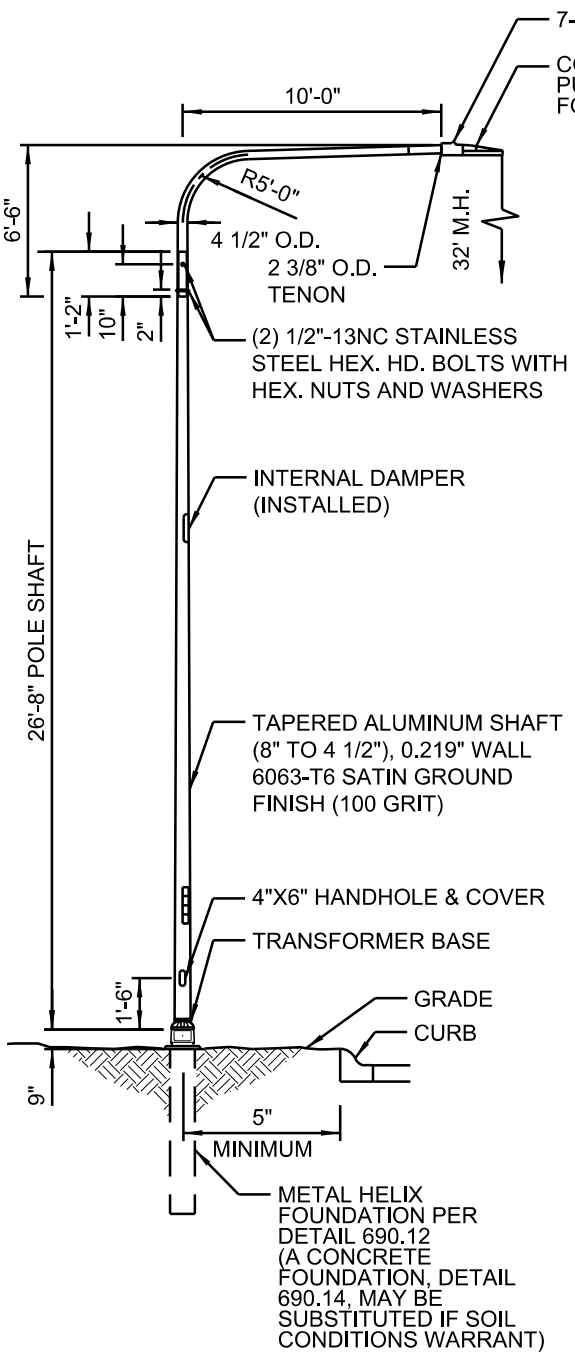

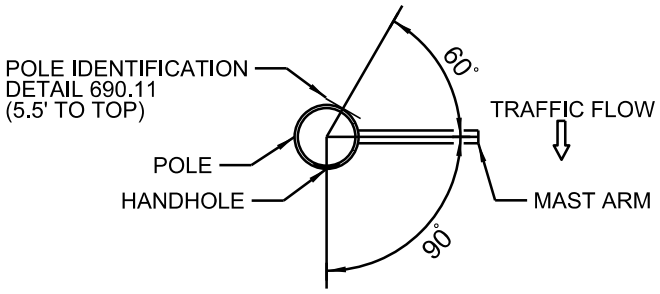

MAST ARM & HANDHOLE ORIENTATION

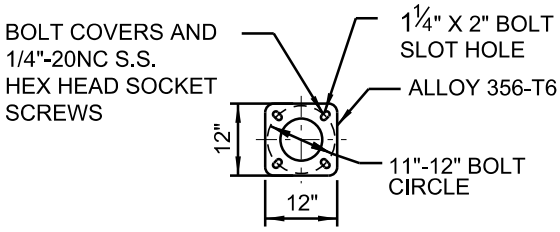

BASE PLATE

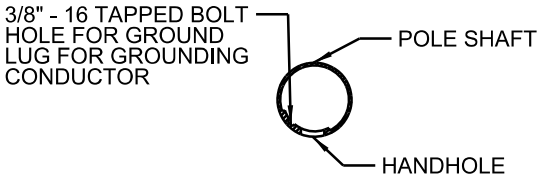

HANDHOLE DETAIL

NOTES:

1. COMPLETE ASSEMBLY POWDER COATED TEXTURED DARK BRONZE, HAPCO, VALMONT OR APPROVED EQUAL.
2. POLE IS UL CLASSIFIED WITH UL LABEL AND HANDHOLE COVER GASKET COMPLYING WITH UL 1572.
3. POLE DESIGN MEETS LATEST AASHTO SPECIFICATION FOR 90 MPH WIND WITH A LUMINAIRE HAVING A MAXIMUM EPA OF 1.6 SQ. FT. AND WEIGHING 75 LBS.

City of Naperville STANDARD DETAIL	DAVIT ARM STREET LIGHT DETAIL - 32 FOOT	LIGHTING 2
	EFFECTIVE: 4/20/2020 — SHEET 1 OF 1	690.02

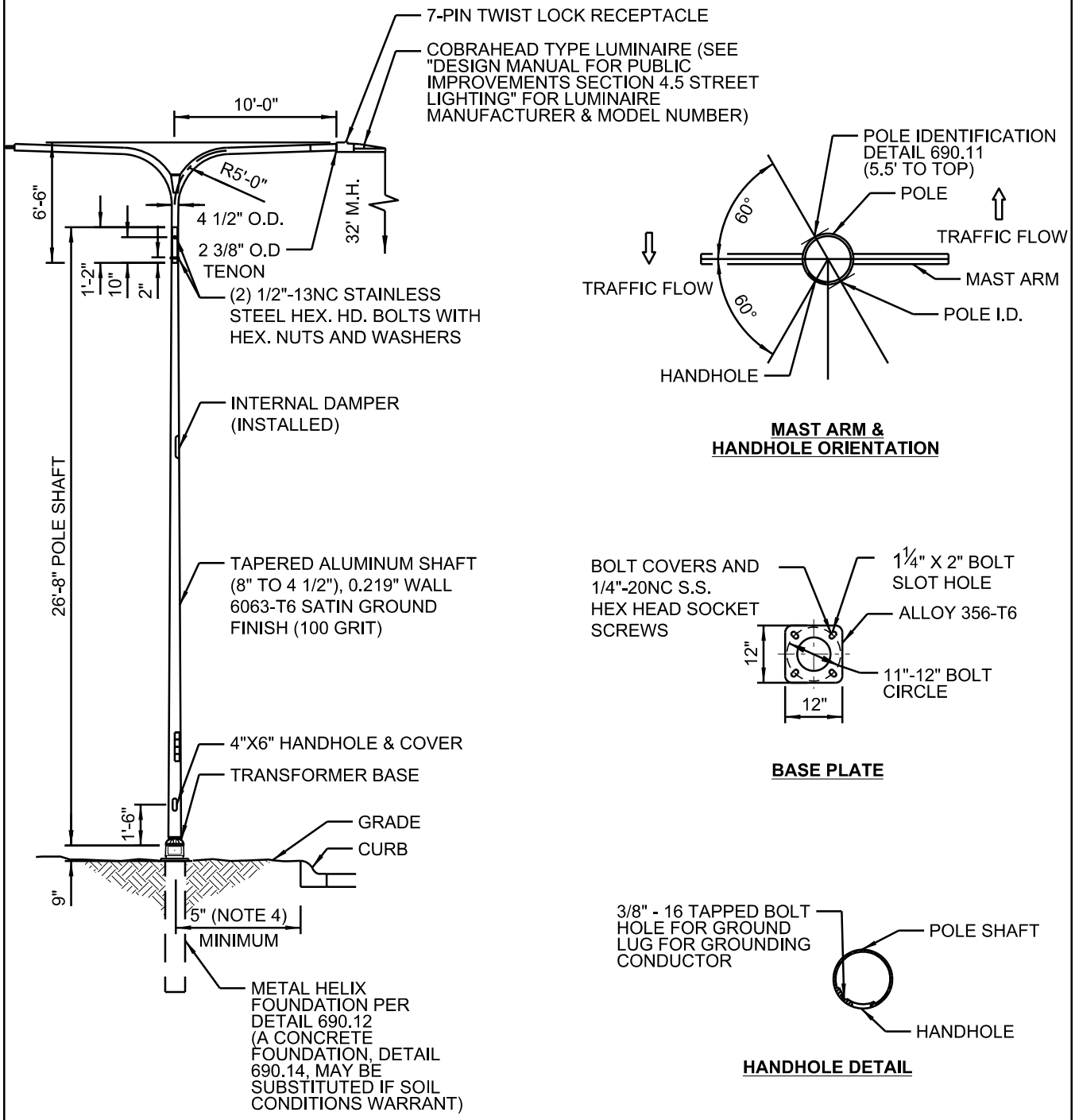

NOTES:

1. COMPLETE ASSEMBLY POWDER COATED TEXTURED DARK BRONZE, HAPCO, VALMONT OR APPROVED EQUAL.
2. POLE IS UL CLASSIFIED WITH UL LABEL AND HANDHOLE COVER GASKET COMPLYING WITH UL 1572.
3. POLE DESIGN MEETS LATEST AASHTO SPECIFICATION FOR 90 MPH WIND WITH A LUMINAIRE HAVING A MAXIMUM EPA OF 1.6 SQ. FT. AND WEIGHING 75 LBS.
4. FOR MEDIAN LOCATIONS POLE SHALL BE IN CENTER OF MEDIAN.

City of Naperville STANDARD DETAIL	TWIN DAVIT ARM STREET LIGHT DETAIL - 32 FOOT	LIGHTING 3
	EFFECTIVE: 4/20/2020 — SHEET 1 OF 1	690.03

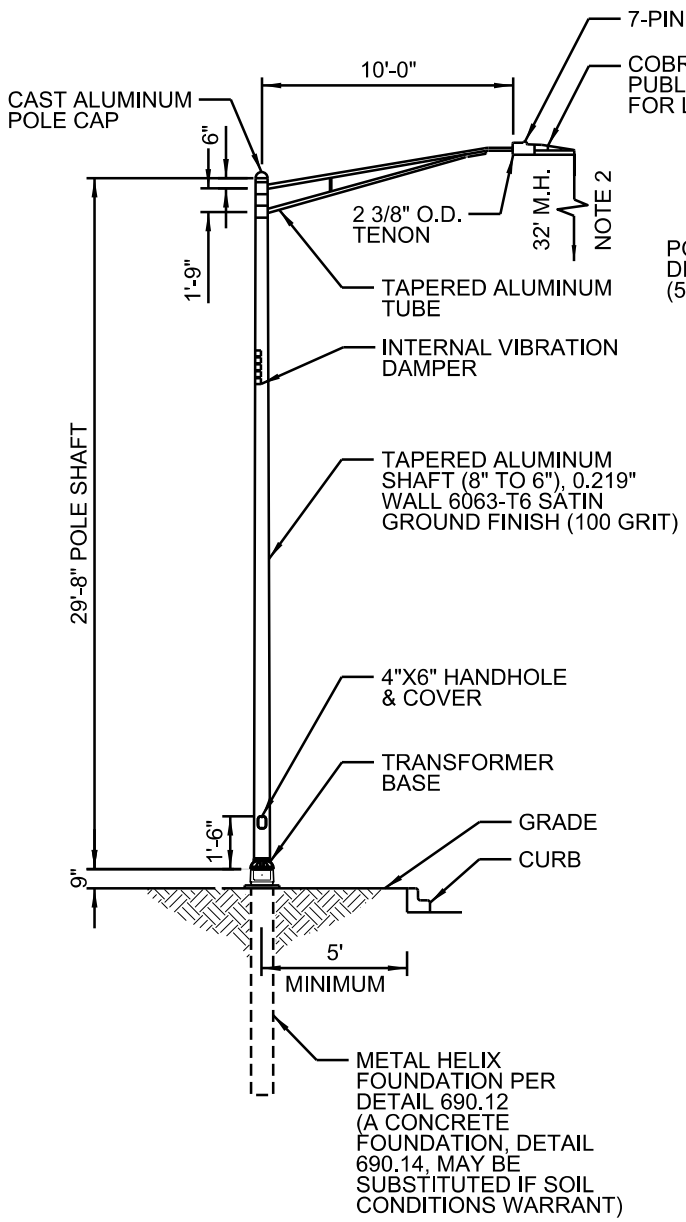

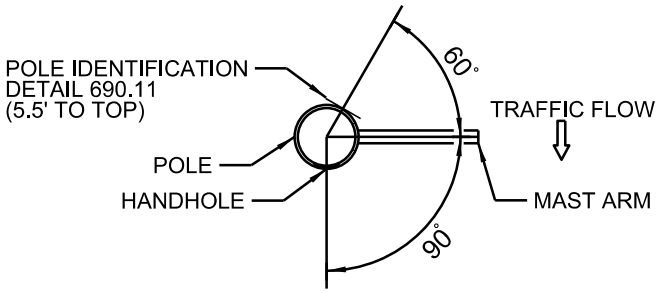

MAST ARM & HANDHOLE ORIENTATION

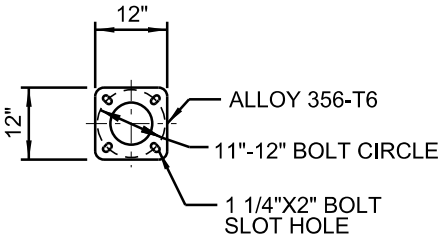

BASE PLATE

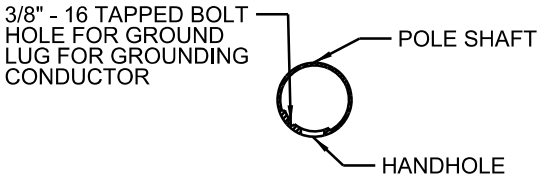

HANDHOLE DETAIL

NOTES:

1. COMPLETE ASSEMBLY NATURAL SATIN FINISH WITH 5 YEAR WARRANTY. HADCO, VALMONT OR APPROVED EQUAL.
2. MOUNTED HEIGHT FROM TENON TO POLE ANCHOR PLATE.
3. LUMINAIRE ATTACHED TO POLE WITH CLAMP BRACKET & 1/2" X 13" N.C. S.S. HARDWARE.
4. POLE IS UL CLASSIFIED WITH UL LABEL AND HANDHOLE COVER GASKET COMPLYING WITH UL 1572.
5. RISE OF LUMINAIRE ARM IS 34".
6. POLE DESIGN MEETS LATEST AASHTO SPECIFICATION FOR 90 MPH WIND WITH A LUMINAIRE HAVING A MAXIMUM EPA OF 1.6 SQ. FT. AND WEIGHING 75 LBS.

City of Naperville STANDARD DETAIL	TRUSS ARM STREET LIGHT DETAIL - 32 FOOT EFFECTIVE: 4/20/2020 | SHEET 1 OF 1	LIGHTING 4 690.04

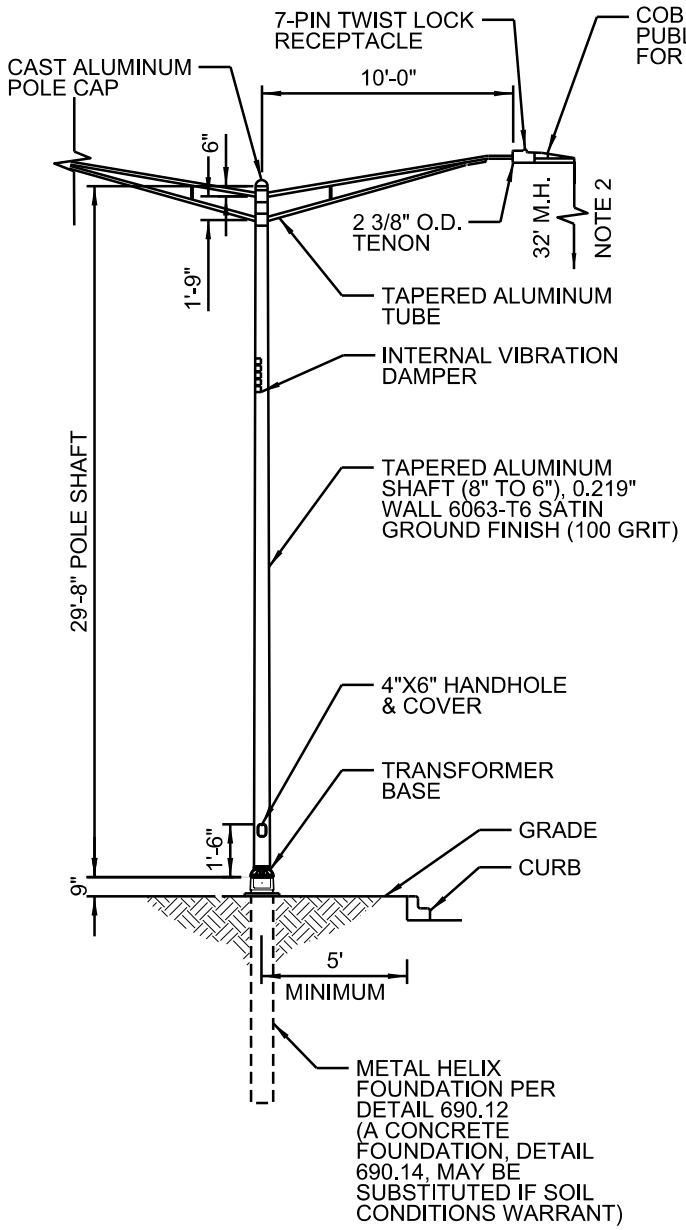

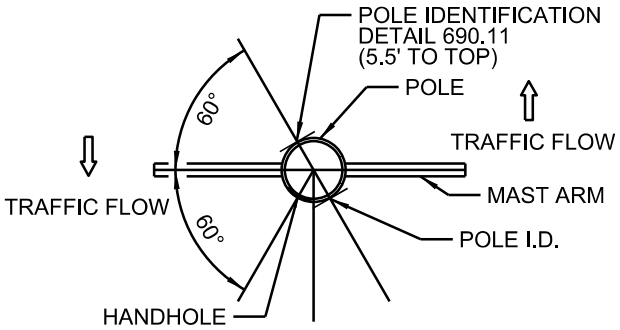

MAST ARM & HANDHOLE ORIENTATION

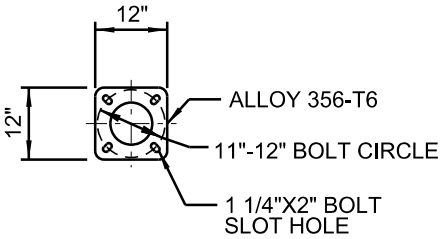

BASE PLATE

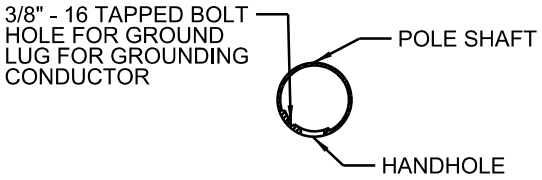

HANDHOLE DETAIL

NOTES:

1. COMPLETE ASSEMBLY NATURAL SATIN FINISH WITH 5 YEAR WARRANTY. HADCO, VALMONT OR APPROVED EQUAL.
2. MOUNTED HEIGHT FROM TENON TO POLE ANCHOR PLATE.
3. LUMINAIRE ATTACHED TO POLE WITH CLAMP BRACKET & 1/2" X 13" N.C. S.S. HARDWARE.
4. POLE IS UL CLASSIFIED WITH UL LABEL AND HANDHOLE COVER GASKET COMPLYING WITH UL 1572.
5. RISE OF LUMINAIRE ARM IS 34".
6. POLE DESIGN MEETS LATEST AASHTO SPECIFICATION FOR 90 MPH WIND WITH A LUMINAIRE HAVING A MAXIMUM EPA OF 1.6 SQ. FT. AND WEIGHING 75 LBS.

City of Naperville STANDARD DETAIL	TWIN TRUSS ARM STREET LIGHT DETAIL - 32 FOOT	LIGHTING 5
	EFFECTIVE: 4/20/2020 — SHEET 1 OF 1	690.05

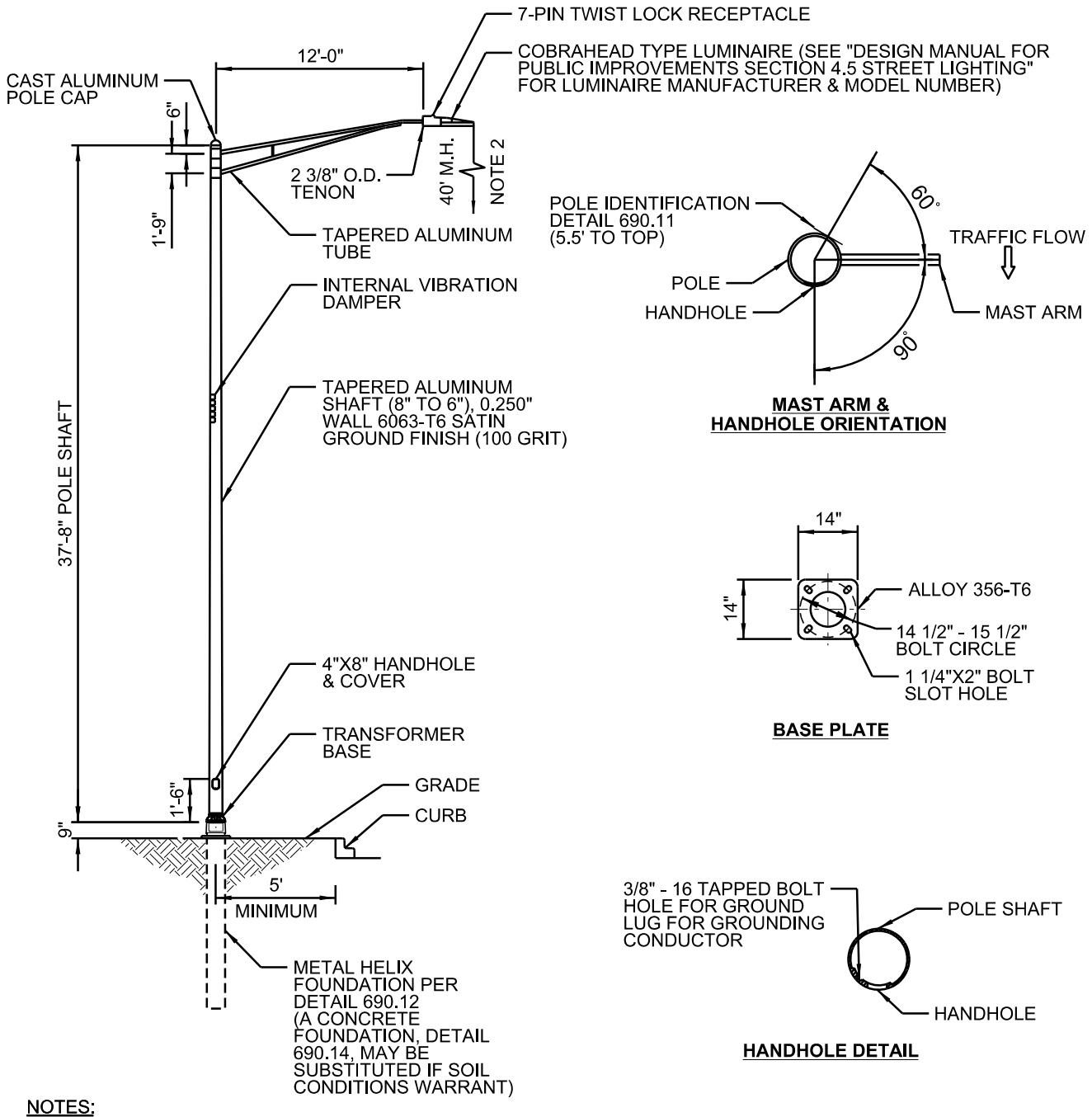

NOTES:

1. COMPLETE ASSEMBLY NATURAL SATIN FINISH WITH 5 YEAR WARRANTY. HADCO, VALMONT OR APPROVED EQUAL.
2. MOUNTED HEIGHT FROM TENON TO POLE ANCHOR PLATE.
3. LUMINAIRE ATTACHED TO POLE WITH CLAMP BRACKET & 1/2" X 13" N.C. S.S. HARDWARE.
4. POLE IS UL CLASSIFIED WITH UL LABEL AND HANDHOLE COVER GASKET COMPLYING WITH UL 1572.
5. RISE OF LUMINAIRE ARM IS 34".
6. POLE DESIGN MEETS LATEST AASHTO SPECIFICATION FOR 90 MPH WIND WITH A LUMINAIRE HAVING A MAXIMUM EPA OF 1.6 SQ. FT. AND WEIGHING 75 LBS.

City of Naperville STANDARD DETAIL	TRUSS ARM STREET LIGHT DETAIL - 40 FOOT EFFECTIVE: 4/20/2020 | SHEET 1 OF 1	LIGHTING 6 690.06

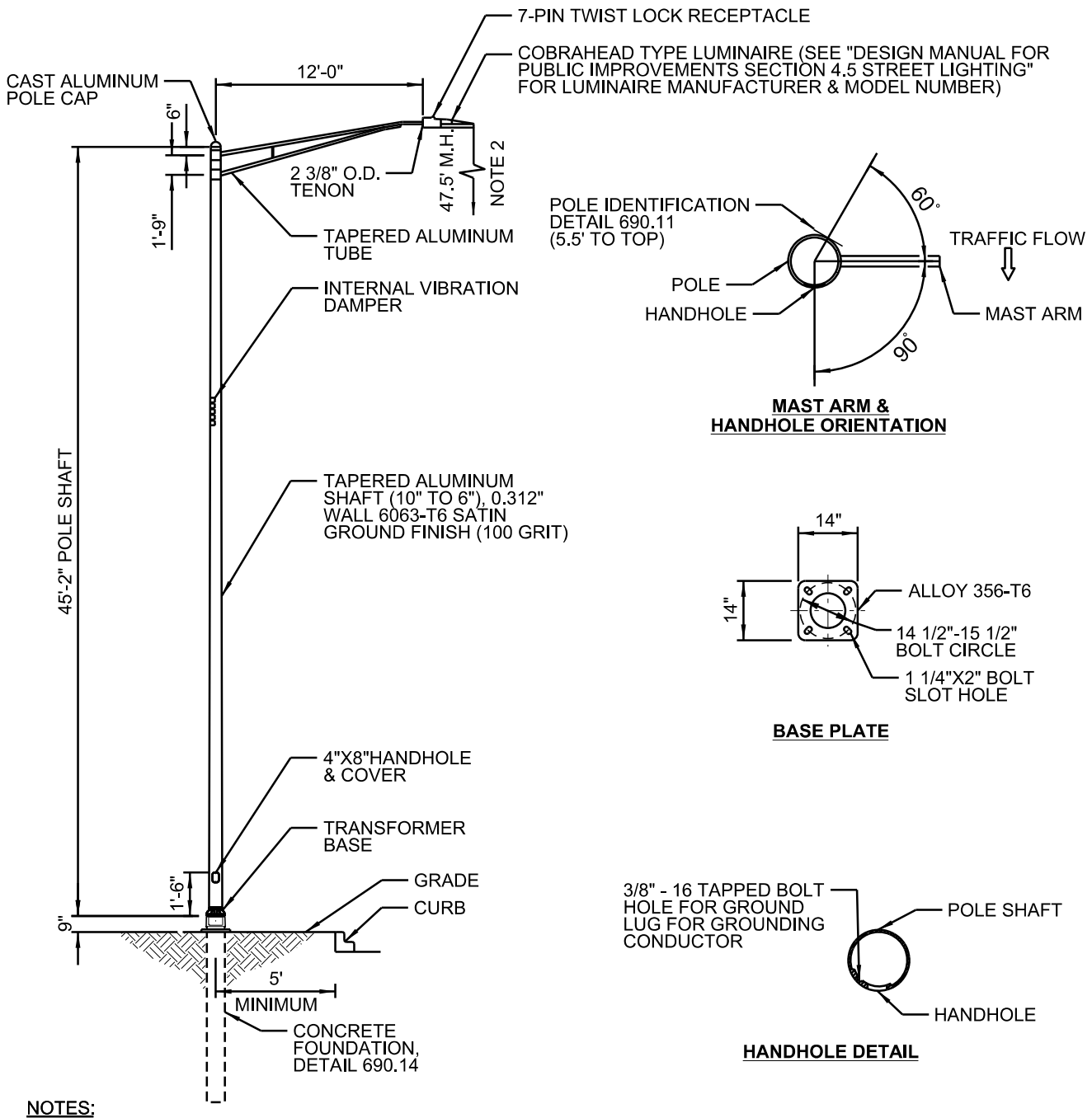

NOTES:

1. COMPLETE ASSEMBLY NATURAL SATIN FINISH WITH 5 YEAR WARRANTY. HADCO, VALMONT OR APPROVED EQUAL.
2. MOUNTED HEIGHT FROM TENON TO POLE ANCHOR PLATE.
3. LUMINAIRE ATTACHED TO POLE WITH CLAMP BRACKET & 1/2" X 13" N.C. S.S. HARDWARE.
4. POLE IS UL CLASSIFIED WITH UL LABEL AND HANDHOLE COVER GASKET COMPLYING WITH UL 1572.
5. RISE OF LUMINAIRE ARM IS 34".
6. POLE DESIGN MEETS LATEST AASHTO SPECIFICATION FOR 90 MPH WIND WITH A LUMINAIRE HAVING A MAXIMUM EPA OF 1.6 SQ. FT. AND WEIGHING 75 LBS.

City of Naperville STANDARD DETAIL	TRUSS ARM STREET LIGHT DETAIL - 47.5 FOOT EFFECTIVE: 4/20/2020 | SHEET 1 OF 1	LIGHTING 7 690.07

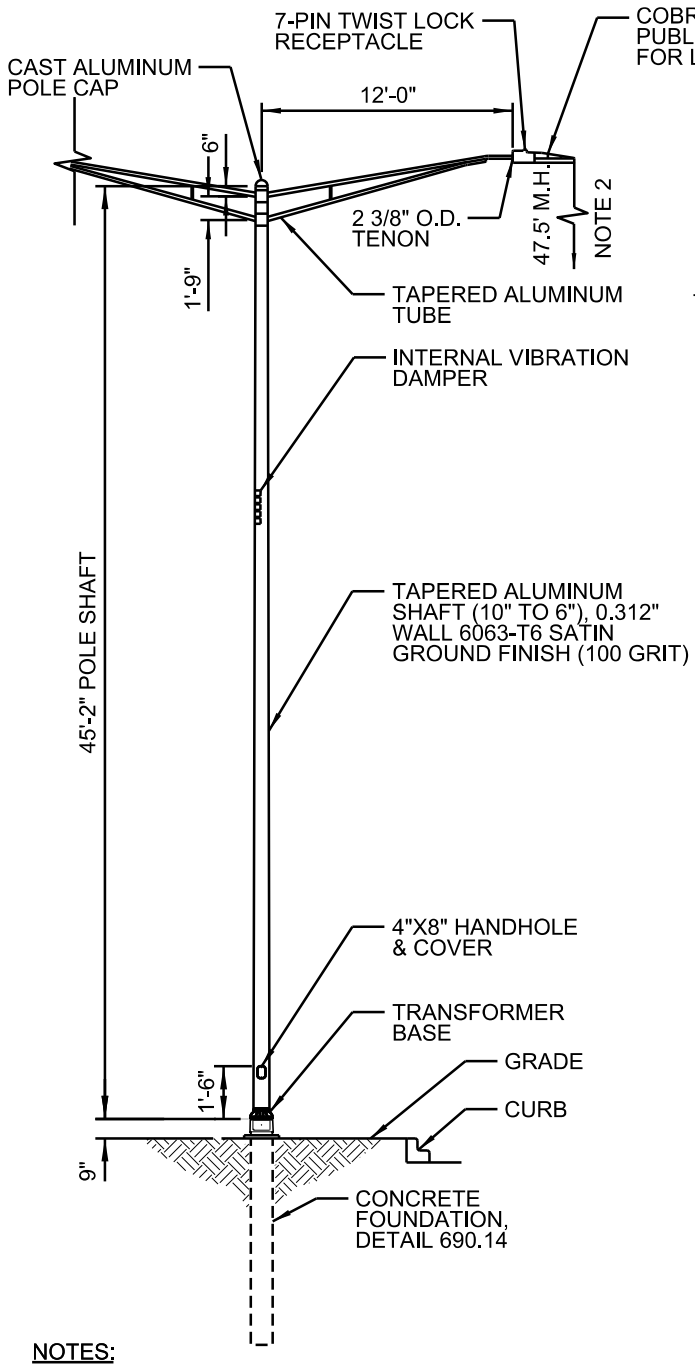

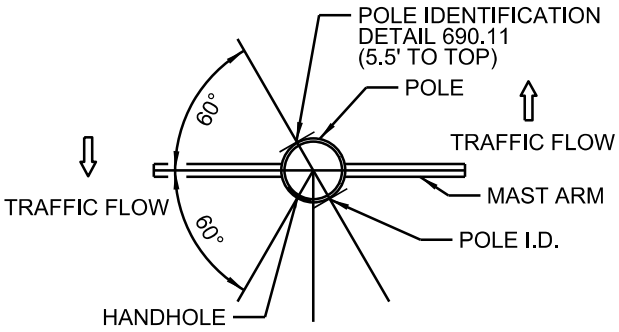

MAST ARM & HANDHOLE ORIENTATION

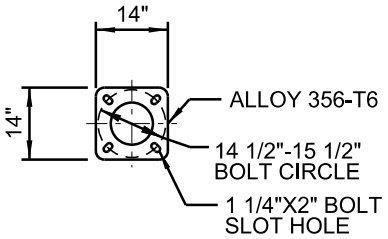

BASE PLATE

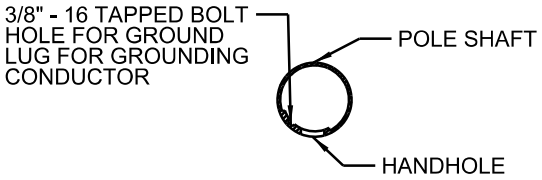

HANDHOLE DETAIL

NOTES:

1. COMPLETE ASSEMBLY NATURAL SATIN FINISH WITH 5 YEAR WARRANTY. HADCO, VALMONT OR APPROVED EQUAL.
2. MOUNTED HEIGHT FROM TENON TO POLE ANCHOR PLATE.
3. LUMINAIRE ATTACHED TO POLE WITH CLAMP BRACKET & 1/2" X 13" N.C. S.S. HARDWARE.
4. POLE IS UL CLASSIFIED WITH UL LABEL AND HANDHOLE COVER GASKET COMPLYING WITH UL 1572.
5. RISE OF LUMINAIRE ARM IS 34".
6. POLE DESIGN MEETS LATEST AASHTO SPECIFICATION FOR 90 MPH WIND WITH A LUMINAIRE HAVING A MAXIMUM EPA OF 1.6 SQ. FT. AND WEIGHING 75 LBS.

City of Naperville STANDARD DETAIL	TWIN TRUSS ARM STREET LIGHT DETAIL - 47.5 FOOT EFFECTIVE: 4/20/2020 | SHEET 1 OF 1	LIGHTING 8 690.08

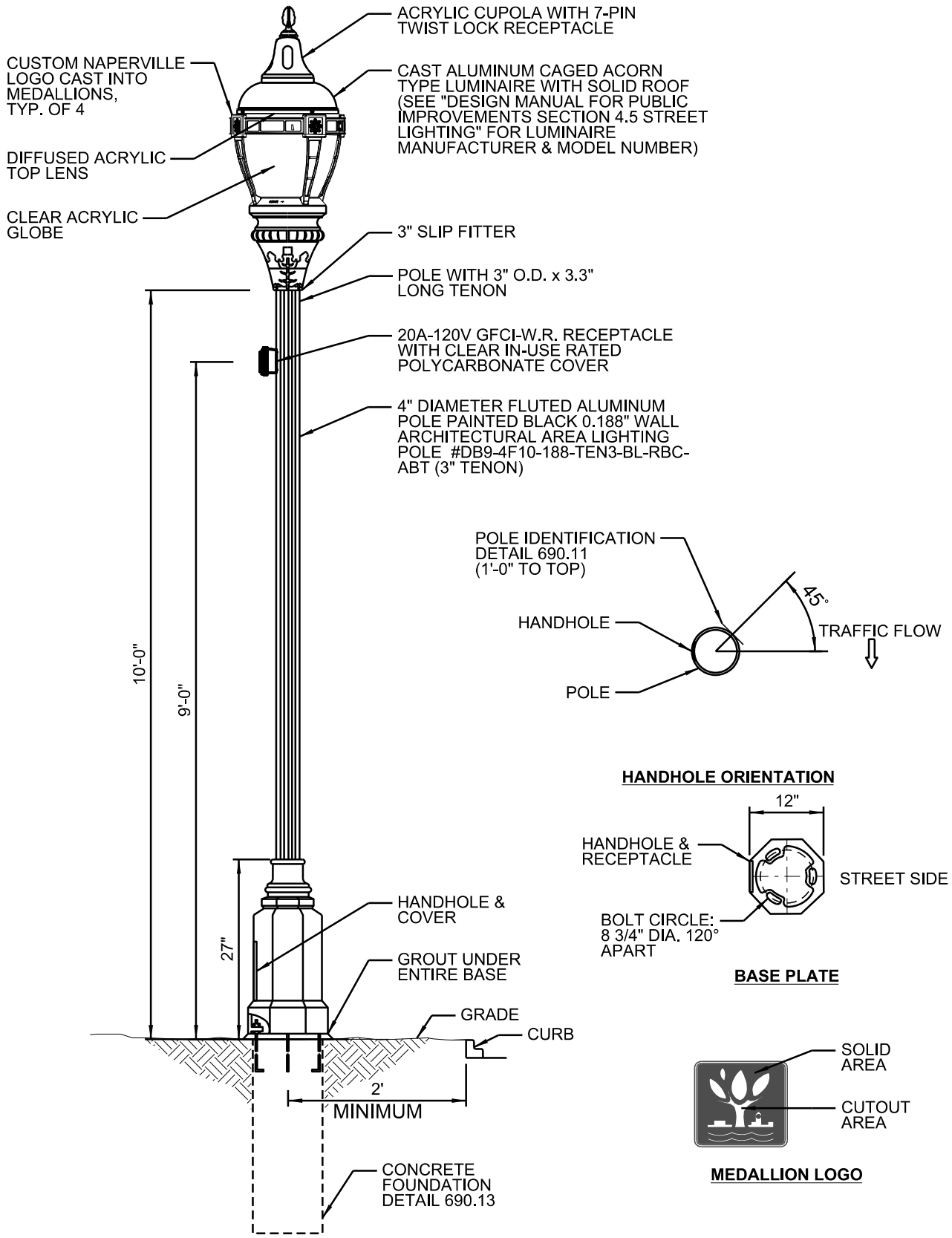

City of Naperville

STANDARD DETAIL

CAGED ACORN STREET LIGHT DETAIL- 10 FOOT (CBD ONLY)

EFFECTIVE: 4/20/2020

SHEET 1 OF 1

LIGHTING 9

690.09

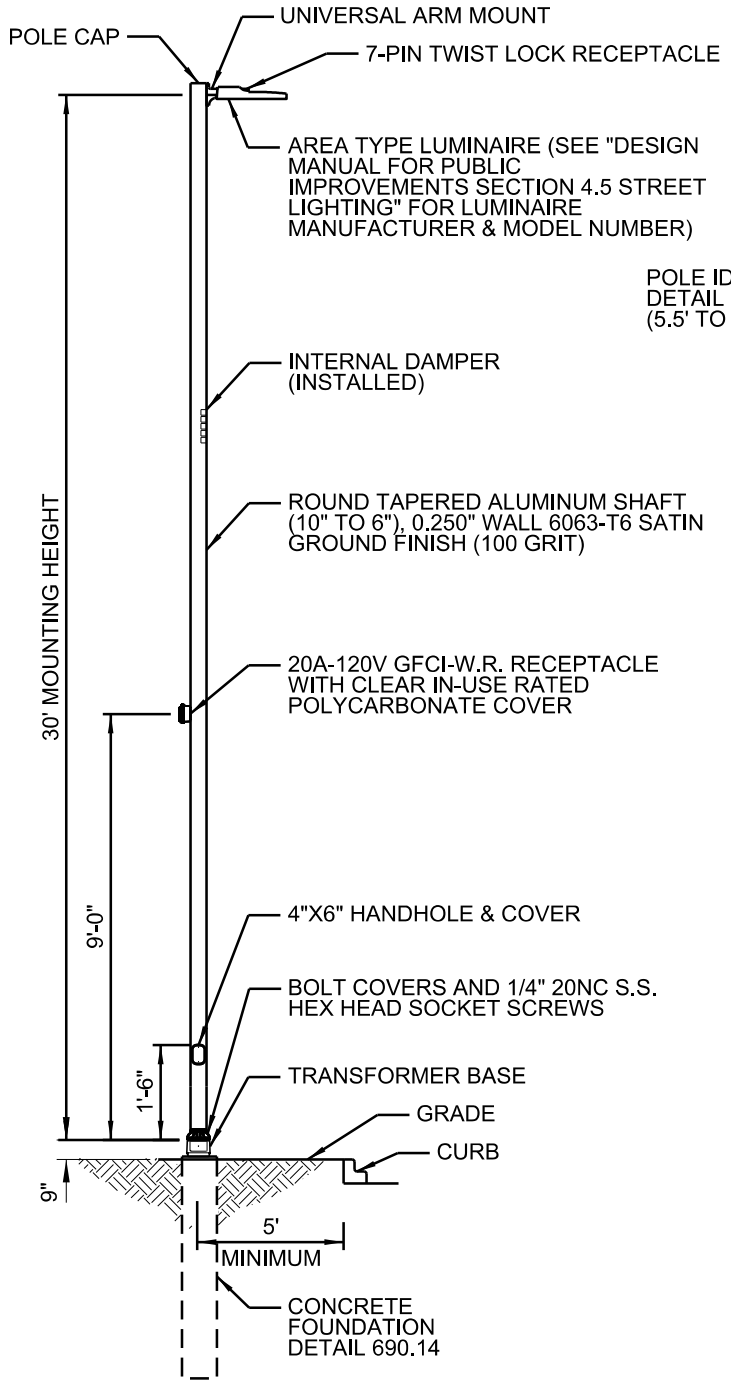

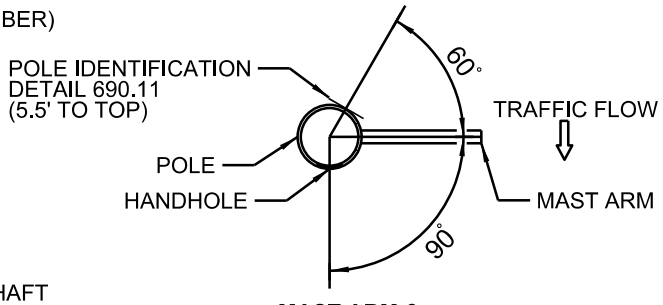

MAST ARM & HANDHOLE ORIENTATION

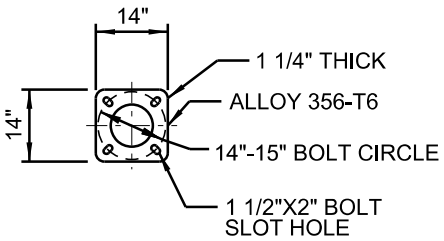

BASE PLATE

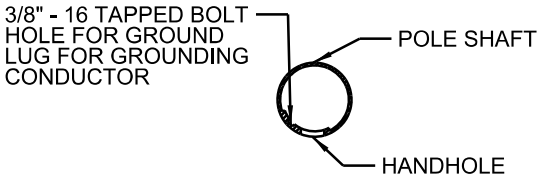

HANDHOLE DETAIL

NOTES:

1. COMPLETE ASSEMBLY POWDER COATED TEXTURED BLACK HADCO, VALMONT, OR APPROVED EQUAL WITH 5 YEAR WARRANTY.
2. POLE IS UL CLASSIFIED WITH UL LABEL AND HANDHOLE COVER GASKET COMPLYING WITH UL 1572.
3. LUMINAIRE IS ATTACHED TO POLE WITH UNIVERSAL ARM MOUNT.
4. POLE DESIGN MEETS LATEST AASHTO SPECIFICATION FOR 90 MPH WIND WITH A LUMINAIRE HAVING A MAXIMUM EPA OF 1.6 SQ. FT. AND WEIGHING 75 LBS.

City of Naperville STANDARD DETAIL	SIDE MOUNT STREET LIGHT DETAIL - 30 FOOT (CBD ONLY)	LIGHTING 10 690.10
	EFFECTIVE: 4/20/2020 | SHEET 1 OF 1	

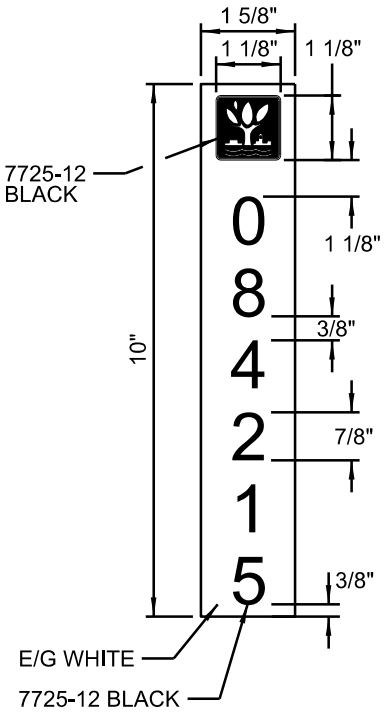

CBD LIGHT POLE LABEL

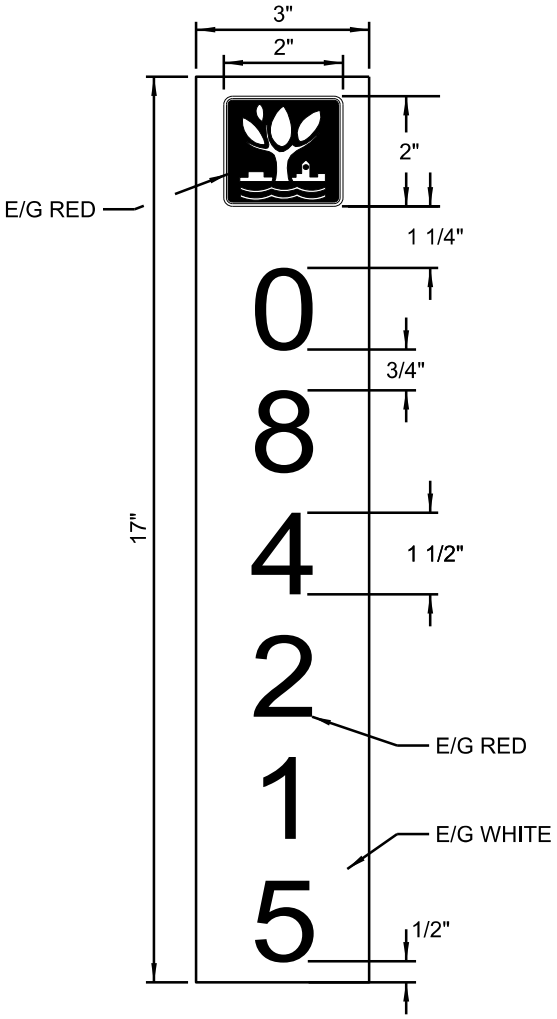

TYPICAL LIGHT POLE LABEL

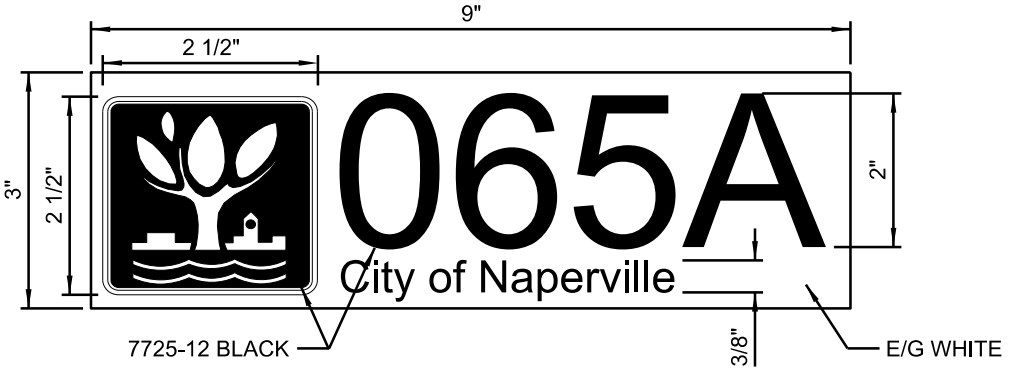

LIGHTING CONTROLLER LABEL (BACK OF CABINET)

NOTES:

1. ALL LABELS SHALL BE WESTERN REMAC OR APPROVED EQUAL.
2. COORDINATE LABEL NUMBERS WITH THE CITY.
3. SEE POLE AND CONTROLLER DETAILS FOR LOCATION OF LABELS.

City of Naperville STANDARD DETAIL	LIGHT POLE AND CONTROLLER LABELING DETAIL EFFECTIVE: 4/20/2020 | SHEET 1 OF 1	LIGHTING 11 690.11

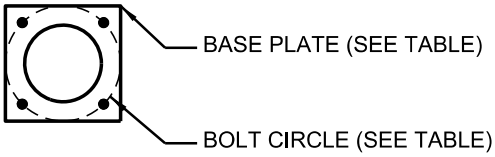

PLAN

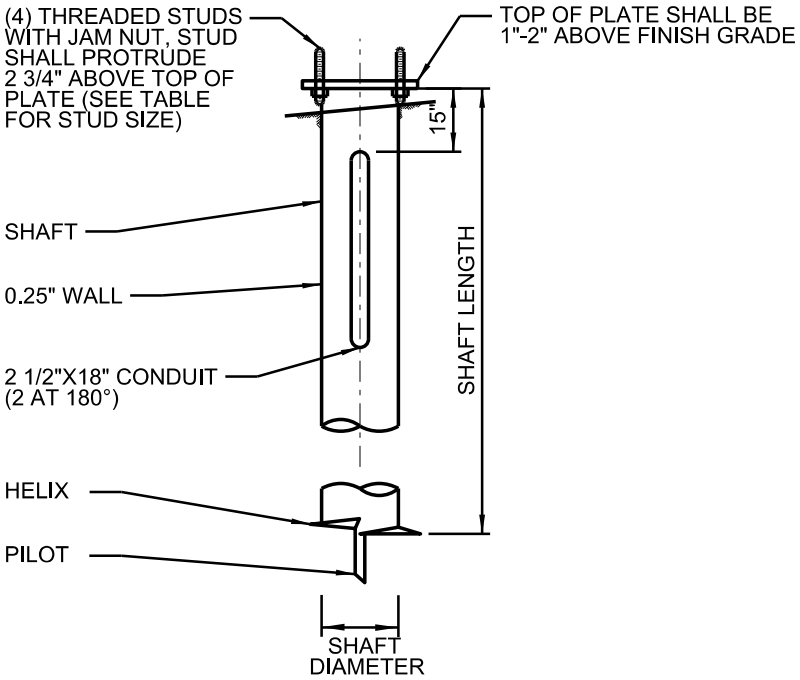

ELEVATION

HELIX FOUNDATION MATERIALS	
ITEM	MATERIAL REQUIREMENT
BASE PLATE	AASHTO M 270M, GRADE 36 (M270M, GRADE 250)
SHAFT	ASTM A 252, GRADE 2 (PHOSPHOROUS 0.04% MAXIMUM, SULFUR 0.05% MAXIMUM)
HELIX SCREW	AASHTO M 183 (ASTM A 635)
PILOT POINT	AASHTO M 270 (ASTM A 575)
ANCHOR RODS/STUDS	AASHTO M 314 (ASTM F 1554)
HEXAGON NUTS	AASHTO M 291M (ASTM A 563) GRADE DH, OR AASHTO M 292 (ASTM A 194) GRADE 2H
WASHERS	AASHTO M 293 (ASTM F 436)

HELIX FOUNDATION SIZE					
POLE HEIGHT	BOLT CIRCLE	SHAFT DIA.	BOLT SIZE	SHAFT LENGTH	BASEPLATE
23 FT	10 1/2"	8 5/8"	1"	5.0 FT	12"X12"X1"
32 FT	11 1/2"	8 5/8"	1"	6.0 FT	12"X12"X1"
40 FT	15"	8 5/8"	1"	6.0 FT	15"X15"X1 1/4"

NOTES:

1. ALL MATERIALS SHALL BE GALVANIZED ACCORDING TO AASHTO M 111 (LATEST REVISION).
2. ALL WELDS SHALL BE CONTINUOUS AND NOT LESS THAN 1/4" FILLET WELDS. THE WELDED FOUNDATION SHALL BE CAPABLE OF WITHSTANDING 10,000 FT/LBS OF INSTALLATION TORQUE APPLIED ABOUT THE AXIS OF THE FOUNDATION.
3. THE HELIX FOUNDATION SHAFT SHALL BE INSTALLED PLUMB AND THE BASE PLATE SHALL BE IN LEVEL.
4. THE CABLE TRENCH SHALL BE BACKFILLED AND FIRMLY COMPACTED BEFORE THE INSTALLATION OF THE LIGHT POLE.
5. THE CONTRACTOR SHALL COORDINATE EXTENSION OF ANCHOR BOLTS ABOVE TOP OF THE BASE PLATE WITH THE BREAKAWAY DEVICE MANUFACTURER'S REQUIREMENTS.
6. ANY VOIDS WITHIN THE METAL FOUNDATION SHALL BE FILLED WITH FINE AGGREGATE.
7. METAL FOUNDATIONS SHALL BE INSTALLED IN UNDISTURBED SOIL. PREDRILLING A PILOT HOLE AND/OR BACK FILLING AROUND THE FOUNDATION IS NOT ALLOWED.
8. THE METAL FOUNDATION SHALL NOT BE INSTALLED TO A TORQUE WHICH EXCEEDS THE MANUFACTURER'S MAXIMUM TORQUE RATING NOR SHALL IT BE INSTALLED TO AN INSTALLATION TORQUE VALUE OF LESS THAN 3,500 FT LB. METAL FOUNDATIONS THAT ARE NOT INSTALLED TO FULL INSTALLATION DEPTH OR DO NOT ACHIEVE THE MINIMUM INTALLATION TORQUE SHALL BE REMOVED AND REPLACE WITH A CONCRETE FOUNDATION.
9. BASE PLATE TO BE PERPENDICULAR TO SHAFT AXIS (± 1 DEG) AND HOLE CENTERLINE CONCENTRIC (± 0.188) TO THE SHAFT AXIS.
10. PILOT POINT AND SHAFT AXES TO BE CONCENTRIC (± 125) AND IN LINE (± 2 DEG).
11. BASE PLATE SHALL BE PERMANENTLY STAMPED WITH MANUFACTURUER'S NAME AND DATE OF MANUFACTURE.

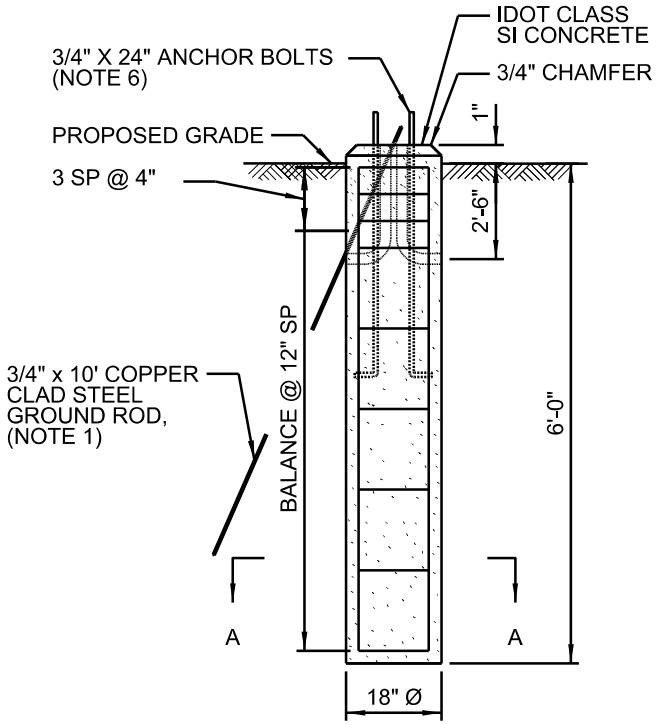

ELEVATION

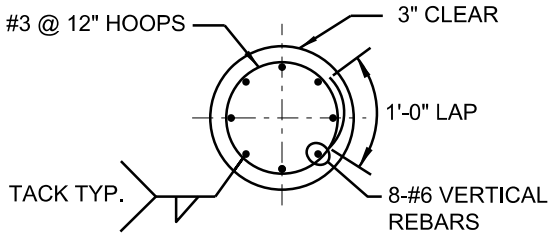

SECTION A-A

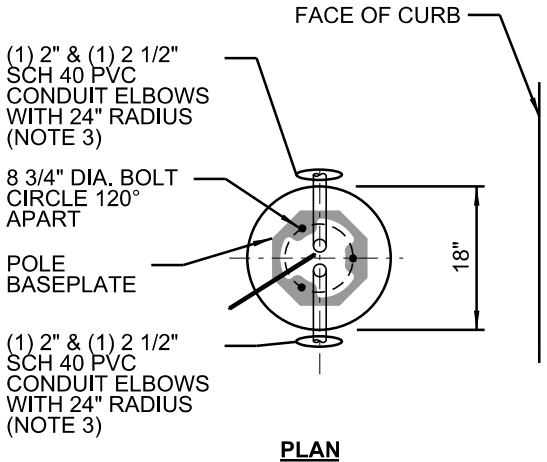

PLAN

NOTES:

1. GROUND ROD SHALL BE CAST INTO CONCRETE FOUNDATION WITH 8 FEET IN CONTACT WITH SOIL AND PROTRUDE 2" ABOVE FOUNDATION.
2. FOUNDATIONS SHALL BE VIBRATED IN ACCORDANCE WITH IDOT STANDARD PRACTICES.
3. COORDINATE PVC CONDUIT STUB UP LOCATIONS WITH POLE BASE OPENINGS. PVC SHALL ONLY BE USED EMBEDDED IN CONCRETE FOUNDATION, UNDERGROUND HDPE CONDUIT SHALL BE RUN BETWEEN POLES & INSTALLED THRU EMBEDDED PVC.
4. ALL DIMENSIONS ARE IN INCHES UNLESS OTHERWISE SHOWN.
5. THE ANCHOR RODS AND RACEWAYS SHALL BE PROPERLY SECURED IN PLACE BEFORE THE CONCRETE IS PLACED.
6. ANCHOR BOLT PROJECTION SHALL BE 3 1/2" ABOVE CONCRETE.
7. THE HOLE FOR THE FOUNDATION SHALL BE MADE BY DRILLING WITH AN AUGER, OF THE SAME DIAMETER AS THE FOUNATION. A FULL DEPTH LINER SHALL BE USED IF SOIL CONDITIONS REQUIRE IT.
8. THE TOP OF FOUNDATION SHALL BE CONSTRUCTED LEVEL. A LINER OR FORM SHALL BE USED TO PRODUCE A UNIFORM SMOOTH SIDE TO THE TOP OF THE FOUNDATION. FOUNDATION TOP SHALL BE CHAMFERED 3/4".
9. THE CONCRETE SHALL BE CLASS SI. CONCRETE SHALL CURE ACCORDING TO ARTICLE 1020.13 OF IDOT STANDARD SPECIFICATIONS (MIN 7 DAYS) BEFORE LIGHT POLES ARE INSTALLED.

City of Naperville **STANDARD DETAIL**	**CONCRETE POLE FOUNDATION DETAIL - 18 INCH DIAMETER (CBD ONLY)** EFFECTIVE: 4/20/2020 | SHEET 1 OF 2	LIGHTING 13 **690.13**

NOTES:

10. THE ANCHOR BOLTS SHALL BE A HOOK ROD TYPE. COLD BENDING OF THE ANCHOR ROD WILL NOT BE ALLOWED. THE RADIUS OF THE HOOK BEND SHALL NOT BE LESS THAN 4 TIMES THE NOMINAL DIAMETER OF THE ANCHOR ROD. A TACK WELDED ANCHOR ROD MAY BE SUBSTITUTED WITH THE APPROVAL OF THE ENGINEER.
11. THE ANCHOR BOLTS SHALL BE ACCORDING TO ASTM F1554 GRADE 725 (GRADE 105). NUTS SHALL BE HEXAGON NUTS ACCORDING TO ASTM A1942H OR ASTM A563 DH, AND WASHERS SHALL BE ACCORDING TO ASTM F436.
12. ANCOR RODS, NUTS AND WASHERS SHALL BE COMPLETELY GALVANIZED BY EITHER THE HOT-DIPPED PROCESS CONFORMING WITH AASHTO M232, THE MECHANICAL PLATING METHOD CONFORMING TO AASHTO M298, CLASS 50 WITH A MAXIMUM COATING THICKNESS OF 150 UM OR THE ELECTROLYTIC PROCESS ACCORDING TO ASTM F1136.
13. THE ANCHOR BOLTS SHALL BE THREADED A MINIMUM OF 6 INCHES WITH A MINIMUM OF 3 INCHES OF THREADED ANCHOR BOLT EMBEDDED IN THE FOUNDATION.
14. THE CABLE TRENCHES AND FOUNDATION SHALL BE BACK FILLED AND COMPACTED AS SPECIFIED BEFORE THE LIGHT POLE IS ERECTED.
15. THE RACEWAYS SHALL PROJECT 1 INCH ABOVE THE TOP OF THE FOUNDATION.

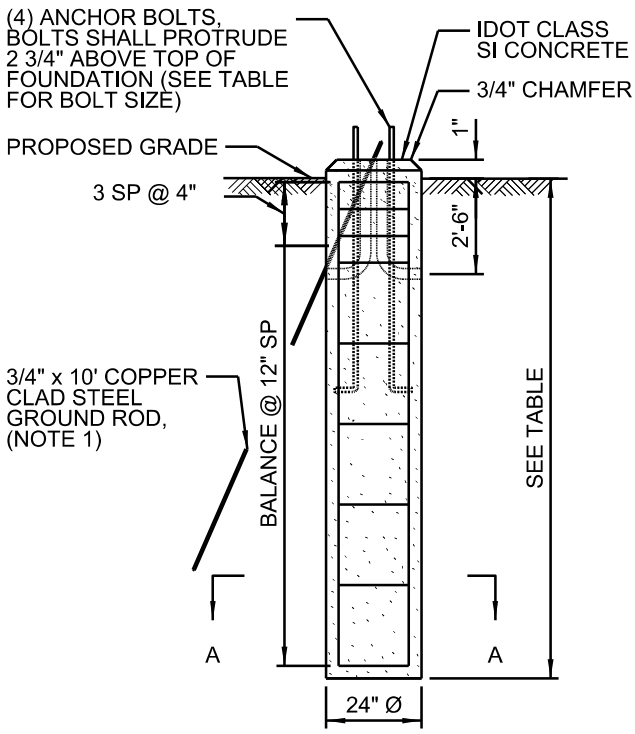

ELEVATION

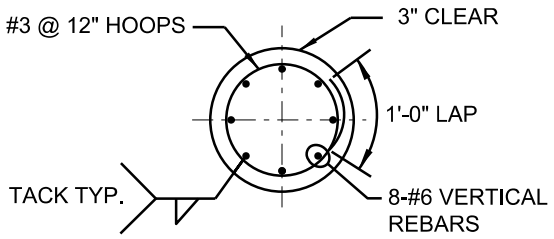

SECTION A-A

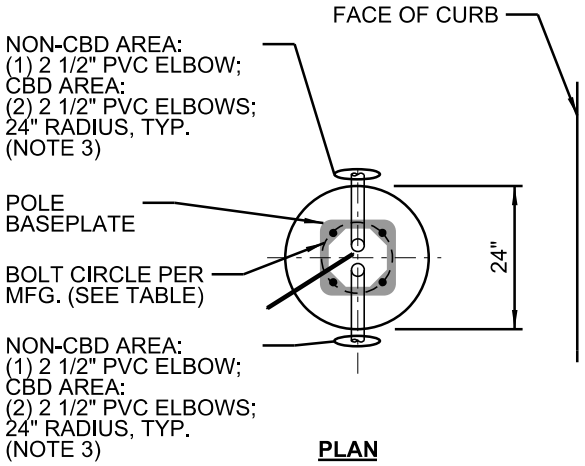

PLAN

LIGHT POLE FOUNDATION DEPTH TABLE

SOIL CONDITIONS	DESIGN DEPTH "D' OF FOUNDATION	
	SINGLE ARM POLE	TWIN ARM POLE
SOFT CLAY Qu = 0.375 TON/SQ. FT.	13'-0"	15'-0"
MEDIUM CLAY Qu = 0.75 TON/SQ. FT.	9'-6"	14'-10"
STIFF CLAY Qu = 1.50 TON/SQ. FT.	7'-6"	8'-7"
LOOSE SAND Ø = 34°	9'-6"	10'-7"
MEDIUM SAND Ø = 37.5°	9'-0"	9'-10"
DENSE SAND Ø = 40°	8'-3"	9'-7"

ANCHOR BOLT SIZE		
POLE HEIGHT	BOLT CIRCLE	BOLT SIZE
23FT	10 1/2"	1" X 36"
30 FT (CBD)	14 1/2"	1 1/4" X 42"
32 FT	11 1/2"	1" X 60"
40 FT	15"	1" X 60"
47.5 FT	15"	1" X 60"

NOTES:

1. GROUND ROD SHALL BE CAST INTO CONCRETE FOUNDATION WITH 8 FEET IN CONTACT WITH SOIL AND PROTRUDE 2" ABOVE FOUNDATION.
2. FOUNDATIONS SHALL BE VIBRATED IN ACCORDANCE WITH IDOT STANDARD PRACTICES.
3. COORDINATE PVC CONDUIT STUB UP LOCATIONS WITH POLE BASE OPENINGS. PVC SHALL ONLY BE USED EMBEDDED IN CONCRETE FOUNDATION, UNDERGROUND HDPE CONDUIT SHALL BE RUN BETWEEN POLES & INSTALLED THRU EMBEDDED PVC.
4. ALL DIMENSIONS ARE IN INCHES UNLESS OTHERWISE SHOWN.

NOTES:

5. THE ANCHOR BOLTS AND RACEWAYS SHALL BE PROPERLY SECURED IN PLACE BEFORE THE CONCRETE IS PLACED.
6. THE FOUNDATION SHALL NOT PROTRUDE MORE THAN 4 IN. ABOVE THE FINISHED GRADE WITHIN A 60 IN. CHORD ACROSS THE FOUNDATION, WITH ANCHOR BOLTS INCLUDED, IN ACCORDANCE AASHTO GUIDELINES. IF THE FOUNDATION HEIGHT, INCLUDING ANCHOR BOLTS, EXTENDS BEYOND THESE SPECIFIED LIMITS, THE FOUNDATION SHALL BE REPLACED.
7. THE HOLE FOR THE FOUNDATION SHALL BE MADE BY DRILLING WITH AN AUGER, OF THE SAME DIAMETER AS THE FOUNDATION. IF SOIL CONDITIONS REQUIRE THE USE OF A LINER TO FORM THE HOLE, THE LINER SHALL BE WITHDRAWN AS THE CONCRETE IS DEPOSITED.
8. THE TOP OF THE FOUNDATION SHALL BE CONSTRUCTED LEVEL. A LINER OR FORM SHALL BE USED TO PRODUCE A UNIFORM SMOOTH SIDE TO THE TOP OF THE FOUNDATION. FOUNDATION TOP SHALL BE CHAMFERED 3/4".
9. THE CONCRETE SHALL BE CLASS SI. CONCRETE SHALL CURE ACCORDING TO ARTICLE 1020.13 OF IDOT STANDARD SPECIFICATION (MIN 7 DAYS) BEFORE LIGHT POLES ARE INSTALLED.
10. THE ANCHOR BOLT SHALL BE A HOOK ROD TYPE. COLD BENDING OF THE ANCHOR BOLT WILL NOT BE ALLOWED. THE RADIUS OF THE HOOK BEND SHALL NOT BE LESS THAN 4 TIMES THE NOMINAL DIAMETER OF THE ANCHOR BOLT. A TACK WELDED ANCHOR BOLT MAY BE SUBSTITUTED WITH THE APPROVAL OF THE ENGINEER.
11. THE ANCHOR BOLTS SHALL BE ACCORDING TO ASTM F1554 GRADE 725 (GRADE 105). NUTS SHALL BE HEXAGON NUTS ACCORDING TO ASTM A1942H OR ASTM A563 DH, AND WASHERS SHALL BE ACCORDING TO ASTM F436.
12. ANCOR BOLTS, NUTS AND WASHERS SHALL BE COMPLETELY GALVANIZED BY EITHER THE HOT-DIPPED PROCESS CONFORMING WITH AASHTO M232, THE MECHANICAL PLATING METHOD CONFORMING TO AASHTO M298, CLASS 50 WITH A MAXIMUM COATING THICKNESS OF 150 UM (6 MILS) OR THE ELECTROLYTIC PROCESS ACCORDING TO ASTM F1136.
13. THE ANCHOR BOLTS SHALL BE THREADED A MINIMUM OF 6 INCHES WITH A MINIMUM OF 3 INCHES OF THREADED ANCHOR ROD EMBEDDED IN THE FOUNDATION.
14. ANCHOR BOLTS SHALL PROJECT 2 3/4" ABOVE THE TOP OF THE FOUNDATION.
15. THE CABLE TRENCHES AND FOUNDATION SHALL BE BACK FILLED AND COMPACTED AS SPECIFIED BEFORE THE LIGHT POLE IS ERECTED.
16. THE RACEWAYS SHALL PROJECT 1 INCH ABOVE THE TOP OF THE FOUNDATION.

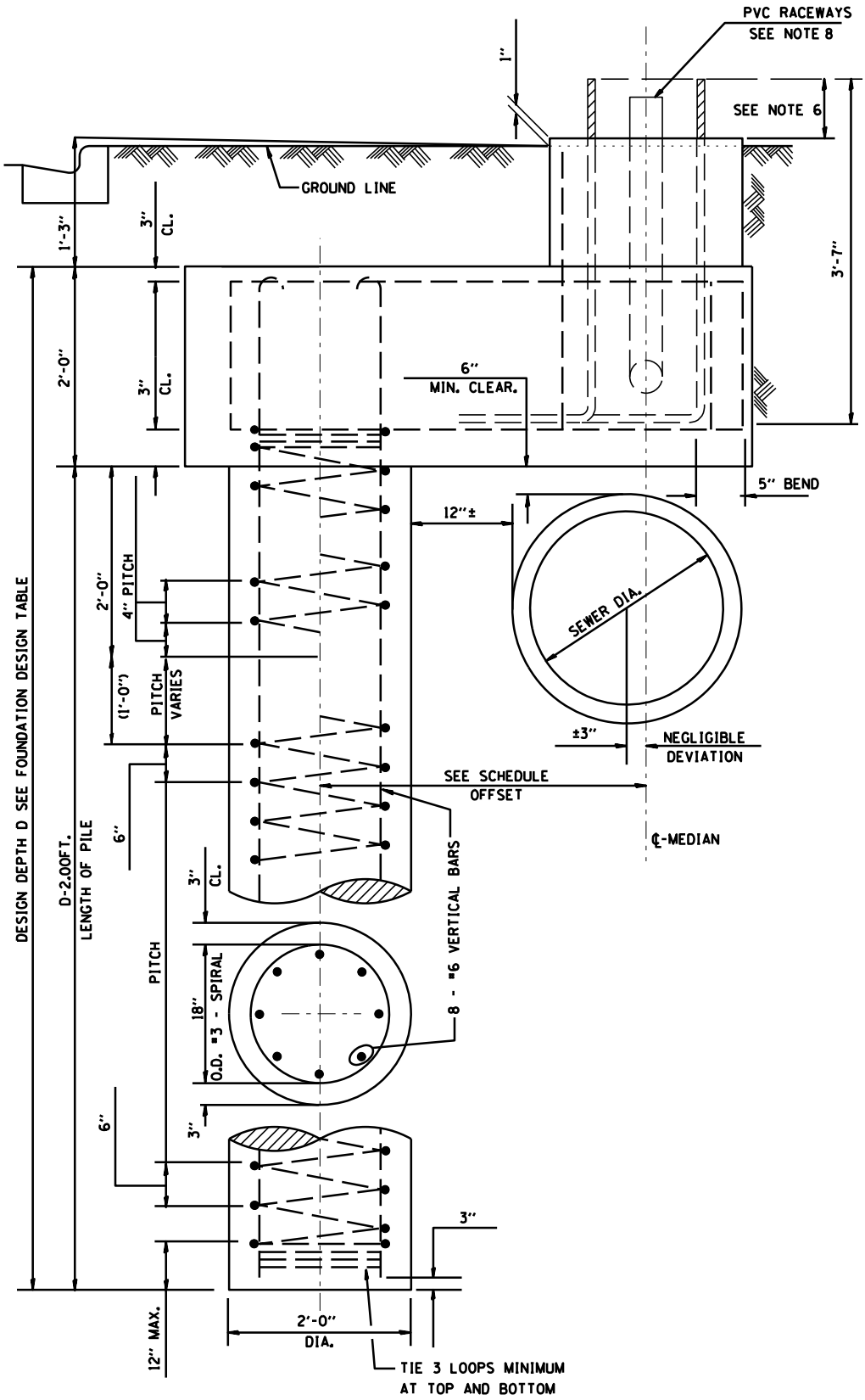

ELEVATION

City of Naperville STANDARD DETAIL	OFFSET CONCRETE POLE FOUNDATION DETAIL-24" DIAMETER	LIGHTING 15
	EFFECTIVE: 4/20/2020 — SHEET 1 OF 3	690.15

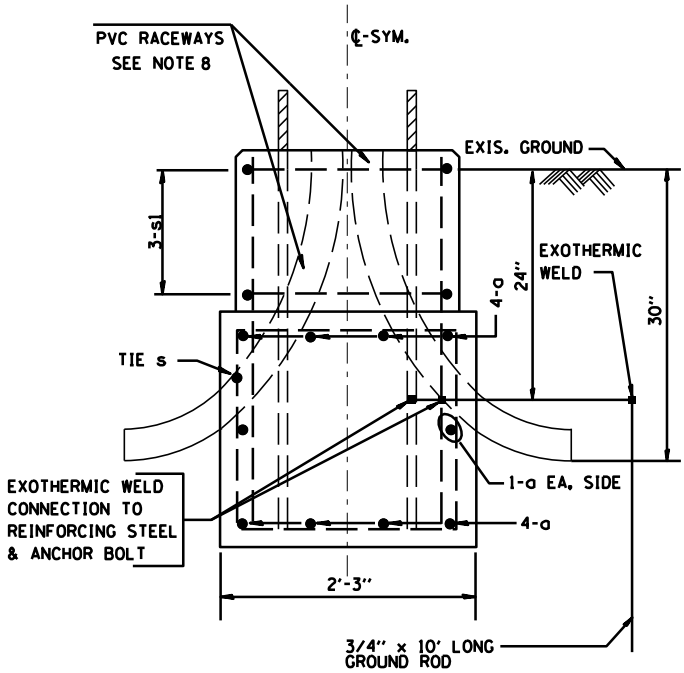

END VIEW

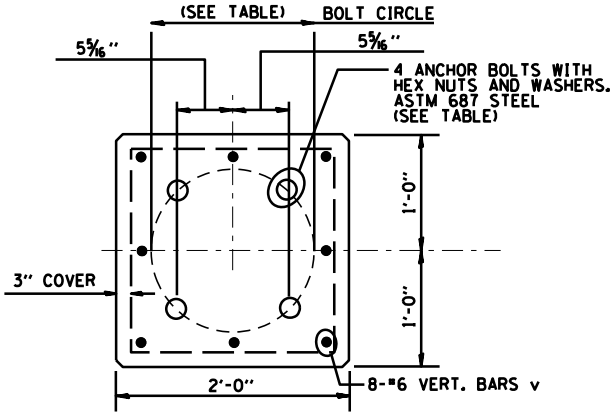

TOP VIEW

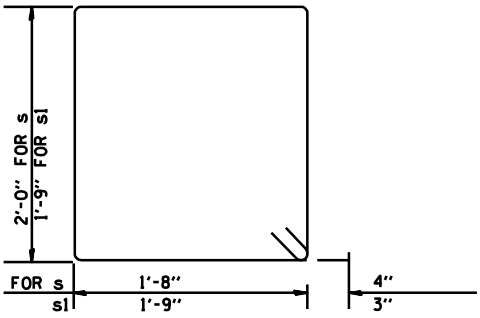

BARS s, s1

OFFSET SCHEDULE

SEWER DIAM. d IN.	PILE OFFSET from℄-MED'N FT.	LENGTH of BAR a FT.
UP TO 24"	3'-3"	#6 x 5'-3"
27" TO 36"	3'-9"	5'-9"
42" TO 48"	4'-6"	6'-6"
54" TO 60"	5'-0"	7'-0"
66" TO 72"	5'-6"	7'-6"

BILL OF MATERIAL

MARK	NO.	SIZE	LENGTH	SHAPE
a	10	6	SEE BELOW	—
s	12	4	8'-0"	▭
s_1	3	3	7'-6"	▭
v_1	8	6	2'-9"	—
v_2				

ANCHOR BOLT SIZE		
POLE HEIGHT	BOLT CIRCLE	BOLT SIZE
23FT	10 1/2"	1"
30 FT (CBD)	14 1/2"	1 1/4"
32 FT	11 1/2"	1"
40 FT	15"	1"
47.5 FT	15"	1"

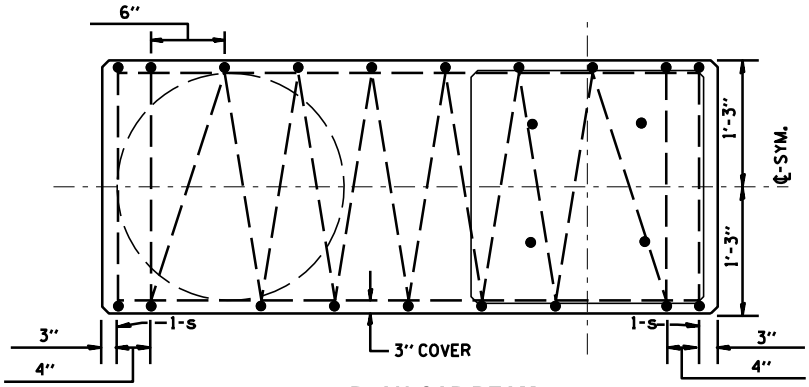

PLAN-CAP BEAM

City of Naperville
STANDARD DETAIL

OFFSET CONCRETE POLE FOUNDATION DETAIL-24" DIAMETER

EFFECTIVE: 4/20/2020 | SHEET 2 OF 3

LIGHTING 15

690.15

FOUNDATION DESIGN TABLE

TYPE OF SOIL	DESIGN DEPTH OF FOUNDATION		REINFORCEMENT IN FOUNDATION			
	SINGLE ARM D	TWIN ARM D	SINGLE ARM		TWIN ARM	
			VERT BARS	SPIRAL	VERT BARS	SPIRAL
SOFT CLAY	13'-0"	15'-0"	8-#6X12'-6"	#3X122'	8-#6X14'-3"	#3X141'
MEDIUM CLAY	9'-6"	10'-9"	8-#6X9'-0"	#3X90'	8-#6X10'-0"	#3X100'
STIFF CLAY	7'-0"	8'-0"	8-#6X6'-6"	#3X66'	8-#6X7'-6"	#3X76'
LOOSE SAND	9'-0"	10'-0"	8-#6X8'-6"	#3X85'	8-#6X9'-6"	#3X94'
MEDIUM SAND	8'-3"	9'-0"	8-#6X8'-0"	#3X78'	8-#6X8'-6"	#3X85'
DENSE SAND	7'-9"	9'-0"	8-#6X7'-6"	#3X73'	8-#6X8'-6"	#3X85'
ROCK OR SOLIDIFIED SLAG	5'-0"	5'-0"	NONE	NONE	NONE	NONE

NOTES:

1. EXCAVATION OF THE POLE FOUNDATION SHALL BE MADE WITH AN AUGER, 24" IN DIAMETER.
2. THE ANCHOR ROD SHALL BE A HOOK ROD TYPE. COLD BENDING OF THE ANCHOR ROD WILL NOT BE ALLOWED. THE RADIUS OF THE HOOK BEND SHALL NOT BE LESS THAN 4 TIMES THE NOMINAL DIAMETER OF THE ANCHOR ROD. A TACK WELDED ANCHOR ROD MAY BE SUBSTITUTED WITH THE APPROVAL OF THE ENGINEER.
3. THE ANCHOR BOLTS AND RACEWAYS SHALL BE PROPERLY SECURED IN PLACE BEFORE THE CONCRETE IS PLACED IN THE FORM.
4. THE ANCHOR RODS SHALL BE ACCORDING TO ASTM F1554 GRADE 725 (GRADE105). NUTS SHALL BE HEXAGON NUTS ACCORDING TO ASTM A 194 2H OR ASTM A 563 DH, AND WASHERS SHALL BE ACCORDING TO ASTM F 436.
5. THE CONTRACTOR SHALL COORDINATE EXTENSION OF ANCHOR BOLTS ABOVE TOP OF FOUNDATION WITH THE BREAKAWAY DEVICE MANUFACTURER'S REQUIREMENTS.
6. RACEWAYS SHALL PROJECT 1" ABOVE THE TOP OF FOUNDATION.
7. THE CABLE TRENCH SHALL BE BACKFILLED AND FIRMLY COMPACTED BEFORE THE LIGHT IS ERECTED.
8. SEE DETAIL 690.14 FOR SIZE AND NUMBER OF PVC RACEWAYS REQUIRED.

SIZE				
POLE HEIGHT	TOP BOLT CIRCLE	BOTTOM BOLT CIRCLE	WIDTH	BOLT DIA.
23 FT	10 1/2"-12"	10"-12 3/4"	11 1/2"	1"
30 FT (CBD)	14 1/2"-15"	14 1/2"-16 1/4"	15"	1 1/4"
32 FT	10 1/2"-12"	10"-12 3/4"	11 1/2"	1"
40 FT	11 1/2"-12"	10"-12 3/4"	11 1/2"	1"
47.5 FT	14 1/2"-15"	14 1/2"-16 1/4"	15"	1"

BASE SUPPLIED WITH:

1. DOOR AND 1/4"-20NC S.S. HEX. HD. SCREW
2. EIGHT WASHERS 1/2" THICK X 2 3/4" O.D. (GALV. PER ASTM A153 OR ASTM B454)
3. FOUR 8NC X 3 3/4" LONG GALV. STL. HEX. HD. BOLTS
4. FOUR 8NC GALV. STL. HEX. NUTS
5. FOUR GALV. STL. LOCK WASHERS
6. FOUR GALV. STL. FLAT WASHERS
7. FHWA APPROVED MEETING AASHTO BREAKAWAY REQUIREMENTS
8. BEFORE INSTALLATION OF BREAKAWAY BASE, USER SHOULD CONSULT WITH AUTHORIZED DISTRIBUTOR REGARDING USERS PROPOSED APPLICATION, LOAD REQUIREMENTS AND INSTALLATION METHODS. FAILURES CAN RESULT FROM USERS MISAPPLICATION OR IMPROPER INSTALLATION. TO APPROACH OPTIMUM STATIC LOADS, USE THE LARGEST POSSIBLE BOLT CIRCLES. SHIMS SHALL NOT BE ALLOWED.

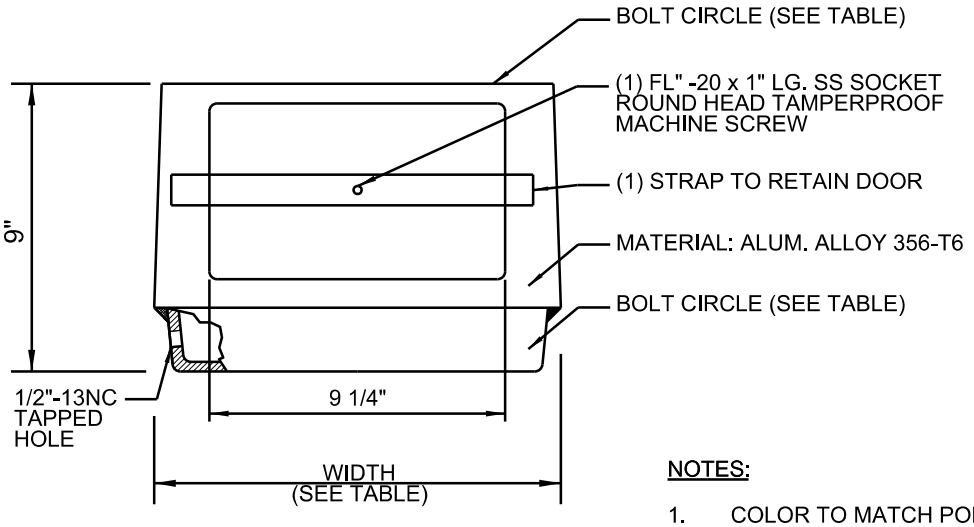

NOTES:

1. COLOR TO MATCH POLE.

City of Naperville
STANDARD DETAIL

TRANSFORMER BASE - 9 INCH

EFFECTIVE: 4/20/2020 | SHEET 1 OF 1

LIGHTING 16

690.16

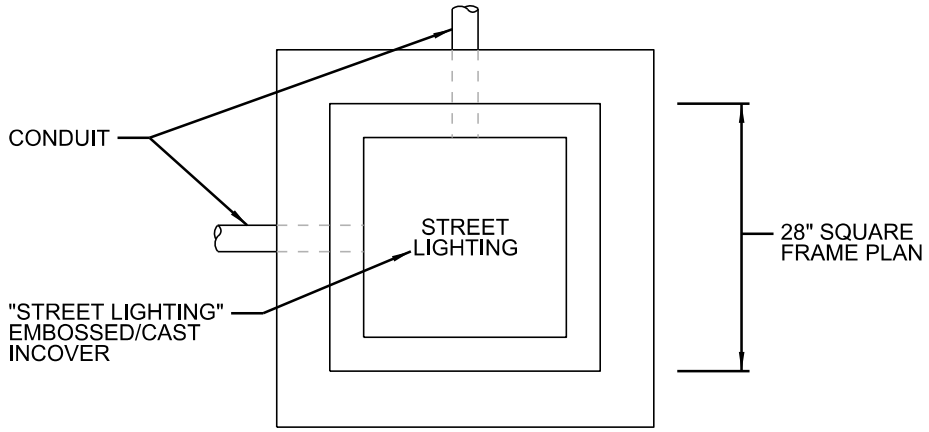

PLAN

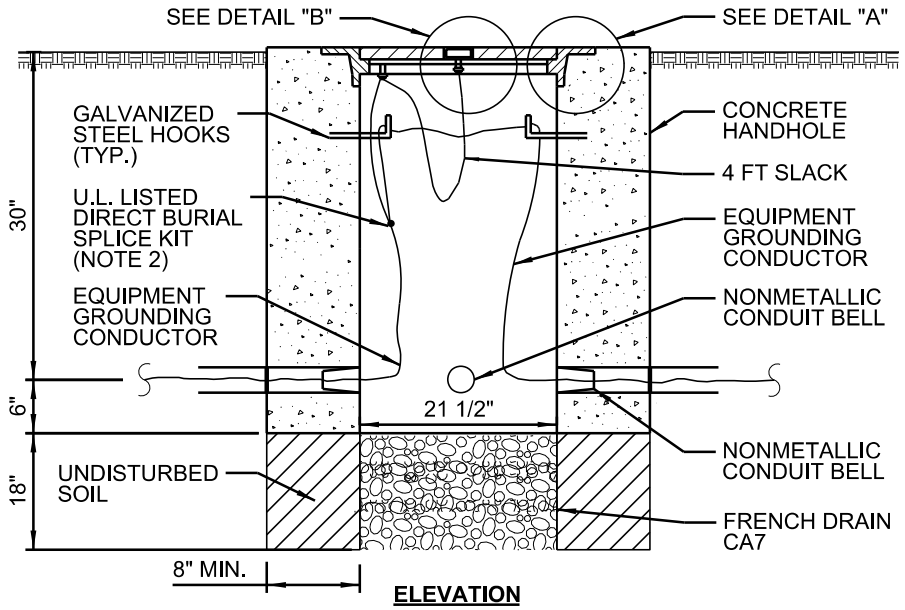

ELEVATION

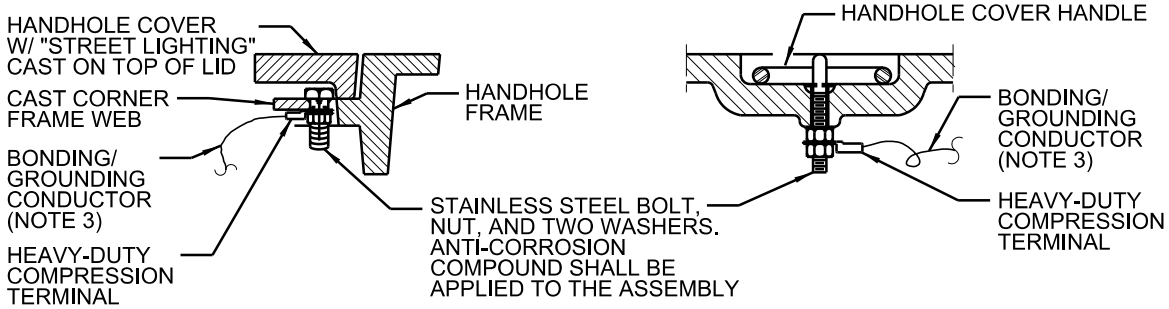

DETAIL "A" **DETAIL "B"**

NOTES:

1. FRAME AND COVER SHALL HAVE MINIMUM WEIGHT 140 LBS AND ABLE TO WITHSTAND AASHTO H-15 LOADING.
2. EQUIPMENT GROUNDING CONDUCTOR SHALL NOT BE CUT.
3. BONDING/GROUNDING CONDUCTOR SHALL BE XLP-TYPE USE-600V & SIZED TO MATCH EQUIPMENT GROUNDING CONDUCTOR.
4. NO SPLICING OF CURRENT CARRYING CONDUCTORS PERMITTED IN HANDHOLE.

City of Naperville STANDARD DETAIL	CAST IN PLACE CONCRETE HANDHOLE DETAIL	LIGHTING 17
	EFFECTIVE: 4/20/2020 — SHEET 1 OF 1	690.17

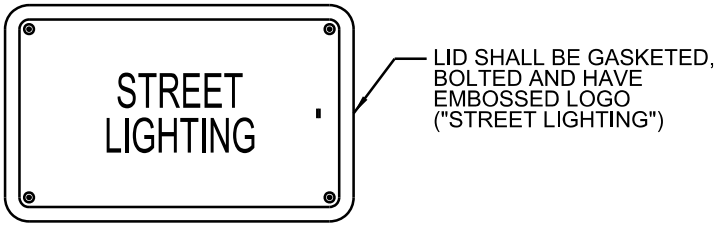

PLAN

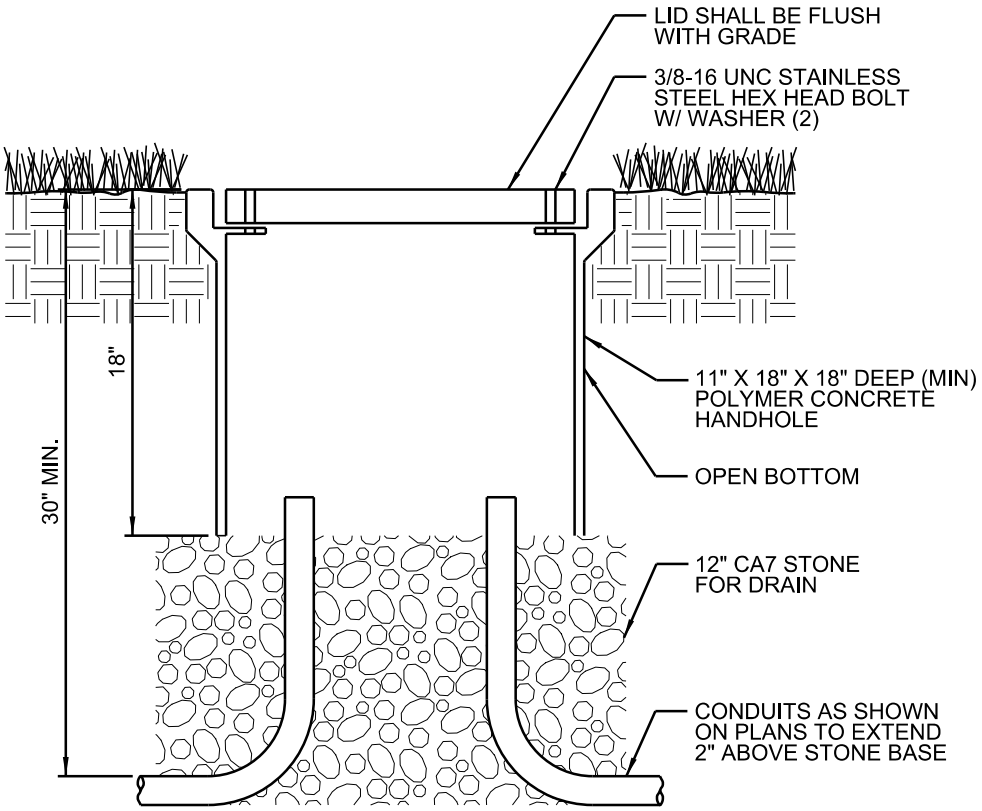

ELEVATION

NOTES:

1. NO SPLICING PERMITTED IN HANDHOLE.
2. POLYMER CONCRETE HANDHOLE AND LID SHALL BE GRAY.
3. BOX & LID SHALL MEET/EXCEED ANSI TIER 15 LOADING REQUIREMENTS, AND BE TESTED IN ACCORDANCE WITH THE LATEST EDITION OF THE ANSI/SCTE 77 "SPECIFICATION FOR UNDERGROUND ENCLOSURE INTEGRITY", AND THE PROVISIONS OF PARAGRAPHS 5.2.3 AND 5.2.4 OF WESTERN UNDERGROUND COMMITTEE GUIDE 3.6.

City of Naperville **STANDARD DETAIL**	**COMPOSITE CONCRETE HANDHOLE DETAIL** EFFECTIVE: 4/20/2020 — SHEET 1 OF 1	LIGHTING 18 **690.18**

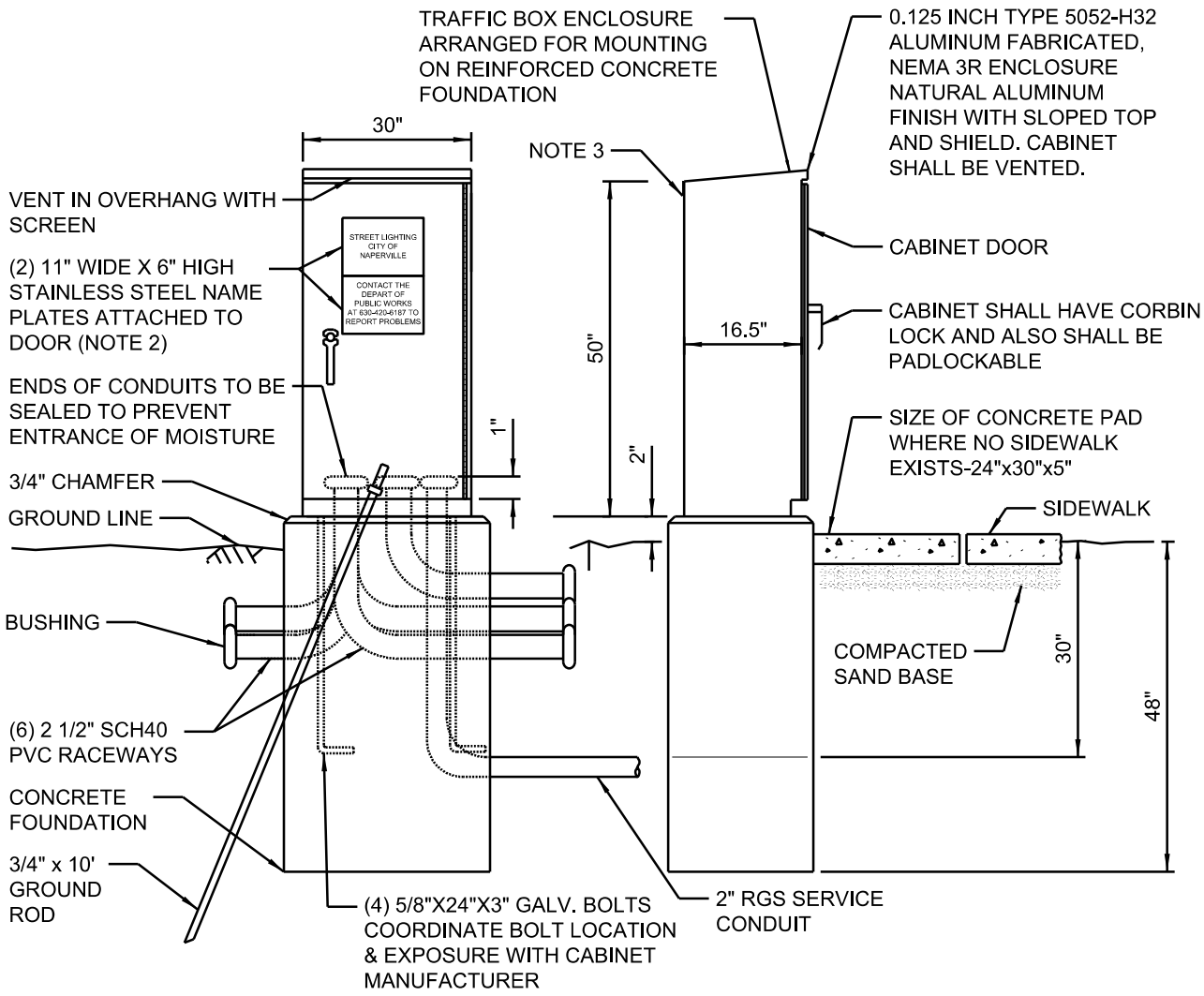

FRONT VIEW **SIDE VIEW**

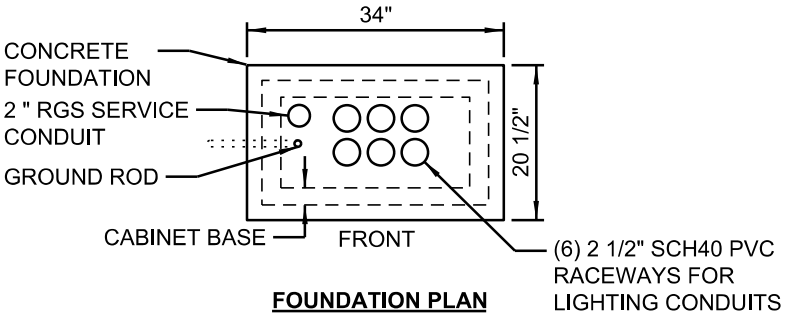

FOUNDATION PLAN

NOTES:

1. CONTRACTOR TO COORDINATE WITH CITY TO VERIFY IF METER IS REQUIRED.
2. TOP NAMEPLATE LOGO "STREET LIGHTING CITY OF NAPERVILLE", AND BOTTOM NAMEPLATE LOGO "CONTACT THE DEPARTMENT OF PUBLIC WORKS AT 630-420-6187 TO REPORT PROBLEMS".
3. ADHESIVE CONTROLLER ID LABEL LOCATED ON BACK OF CONTROLLER AT UPPER LEFT CORNER TOP ON OUTSIDE (SEE DETAIL 690.11).

City of Naperville STANDARD DETAIL	STREET LIGHTING CONTROLLER SCHEMATIC-100A (NON-CBD)	LIGHTING 21
	EFFECTIVE: 4/20/2020 / SHEET 1 OF 3	690.21

LIGHTING CONTROLLER CIRCUIT LOADS (NOTE 2)				
CIRCUIT ID	ROADWAY LUMINAIRE		TOTAL CIRCUIT LOAD	
	QTY.	LOAD/FIXT. (WATTS)	(WATTS)	AMPS (VOLTS)
A		W	W	A (120V)
B		W	W	A (120V)
C		W	W	A (120V)
D		W	W	A (120V)
TOTAL		N/A	W	A (240V)

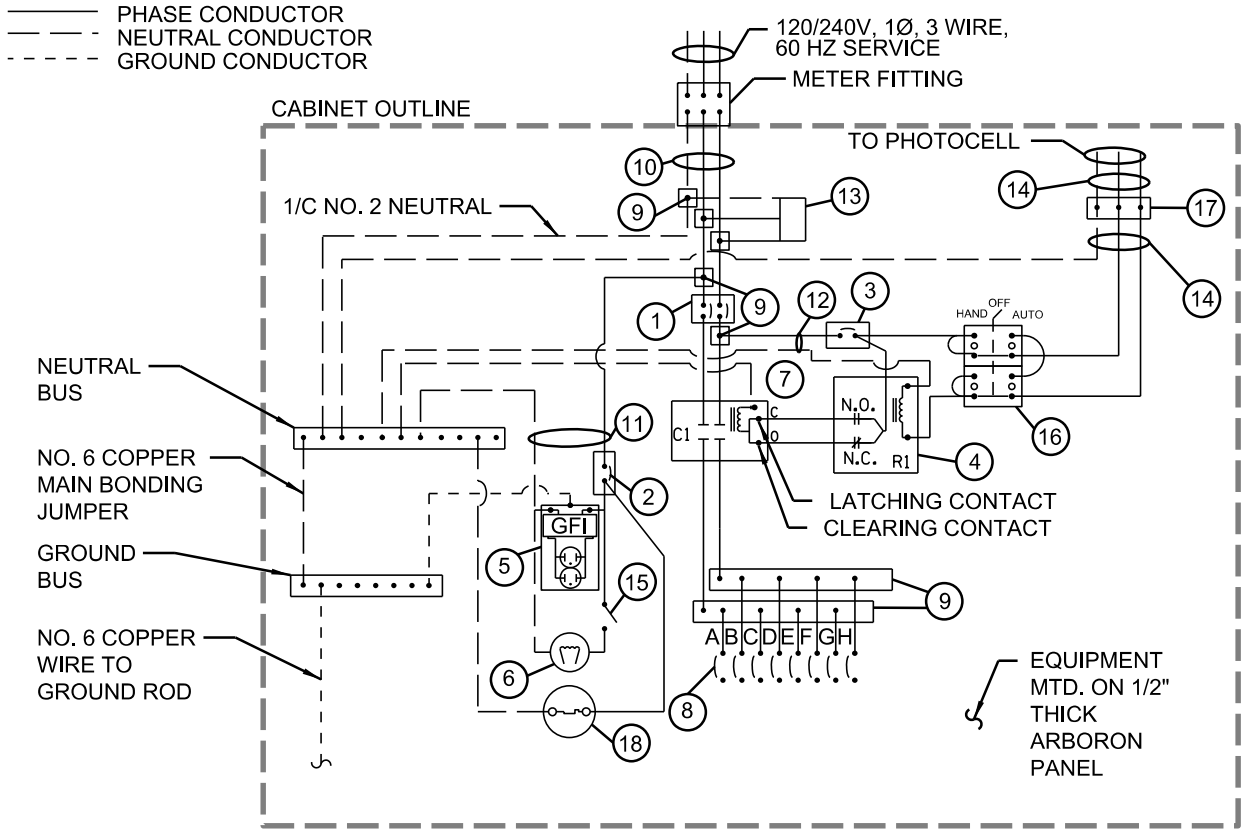

NOTES:

1. IN ADDITION TO THE TERMINATIONS SHOWN, THE NEUTRAL AND GROUND BUS BARS SHALL ACCOMODATE A MINIMUM OF 4 ADDITIONAL TERMINATORS (#2-#14).

2. CIRCUIT LOAD TABLE TO BE FILLED OUT BY DESIGNER.

ITEM	SPECIFICATION	MFG./MODEL NO. OR APPR'D EQUAL
1 MAIN CIRCUIT BREAKER	MOLDED CASE, PANEL -MOUNTED, 100 AMPERE, 2P, 240V SERVICE RATING, 65KAIC	EATON ED2100L 2P 100A
2 LAMP/HEATER CIRCUIT BREAKER	MOLDED CASE, PANEL-MOUNTED, 15 AMPERE, 1P, 120V RATING, 14KAIC	EATON EHD1015 1P 15A
3 PHOTOELECTRIC CONTROL CIRCUIT BREAKER	MOLDED CASE, PANEL -MOUNTED, 15 AMPERE, 1P, 120V RATING, 14KAIC	EATON EHD1015 1P 15A
4 AUXILIARY RELAY	10A-120 V OPERATED DPDT 60 HZ COIL, 2 NO & 2 NC CONTACTS, ADJUSTABLE TIME DELAY	NTE NO. R28-11A10-120L
5 CABINET RECEPTACLE AND BOX	COMMERCIAL GRADE GFCI 20A/120V, W.R., MOUNTED IN A WEATHERPROOF CAST ALUMINUM SINGLE GANG BOX WITH WEATHERPROOF COVER	RECEPTACLE: HUBBELL NO. GFRST20I, BOX: INTERMATIC NO. B-5V, COVER: INTERMATIC NO. FG-1DCV
6 CABINET LIGHT	LED VAPORPROOF FIXTURE 16W 4000°K	RAB NO. VXLED13NDG-3/4
7 CONTACTOR	100 AMPERE, 2P, 120V COIL, MECHANICALLY HELD	SQUARE D NO. 8903SQO10V02
8 BRANCH LINE CIRCUIT BREAKERS	MOLDED CASE, PANEL -MOUNTED, (8), 30A, 1P, 120V RATING, 14KAIC	EATON EHD1030 1P 30A
9 POWER DISTRIBUTION BLOCK	600 VOLT, INSULATED, SIZE AS REQ'D, 10KAIC	N/A
10 SERVICE CABLES	3-600V XLP NO. 2	MARATHON
11 LAMPHOLDER WIRE	2-600V XLP NO. 12	N/A
12 CONTROL WIRE	2-600V XLP NO. 12	N/A
13 SURGE ARRESTOR	10 K AMPERE RATING	SQUARE D NO. SDSA 1175
14 PHOTOELECTRIC CONTROL WIRE	3-600V XLP NO. 10	N/A
15 DOOR SWITCH	20A/120V, DOOR MOUNTED SNAP ACTION TYPE PLUNGER SWITCH	HONEYWELL NO. BA-2RQ1-A2
16 HAND-AUTO-OFF CONTROL SWITCH	20A, 3 POS. MTD IN CAST ALUM. ENCLOSURE	SQUARE D NO. 9001 KYK 111
17 PHOTOCELL TERMINAL BLOCK	3 TERMINAL, SCREW TYPE, MAX. #10 WIRE SIZE	CINCH NO. 3-142
18 CABINET HEATER	200W-120V, FORCED FAN, FULLY ENCLOSED INTEGRAL THERMOSTAT (NOT ON EQUIPMENT PANEL)	HOFFMAN NO. DAH2001A

NOTES:

1. THE LIGHTING CONTROLLER TOGETHER WITH ALL OF ITS COMPONENTS SHALL BE UL LISTED AS AN "ENCLOSED INDUSTRIAL CONTROL PANEL" UNDER UL 508A.
2. CONNECTION OF SURGE ARRESTOR TO LINE SIDE OF MAIN CIRCUIT BREAKER SHALL NOT BE "DOUBLE LUGGED."
3. THE MAIN CIRCUIT BREAKER SHALL BE LABELED "SERVICE DISCONNECT."
4. ALL SWITCHES AND CONTROLS SHALL BE IDENTIFIED USING TWO COLOR ENGRAVED NAMEPLATES.
5. THE PANEL MANUFACTURER SHALL LABEL THE CABINET WITH THE APPROPRIATE ARC FLASH WARNING AND PERSONNEL PROTECTION EQUIPMENT REQUIRED FOR SERVICING.
6. ALL EXPOSED BUSBARS SHALL BE INSULATED.
7. POWER WIRING SHALL BE COPPER RHH/RHW 600 VOLTS.

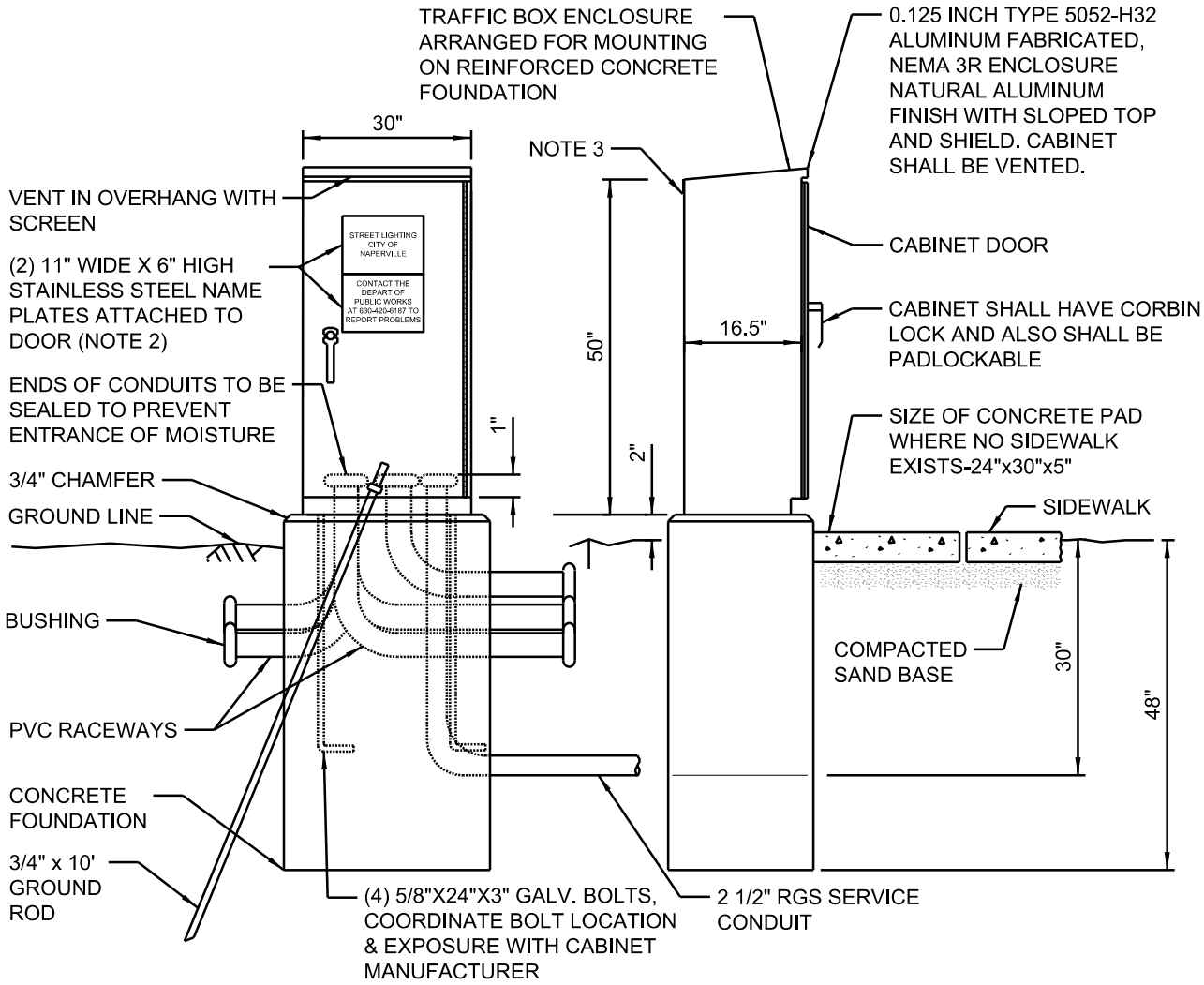

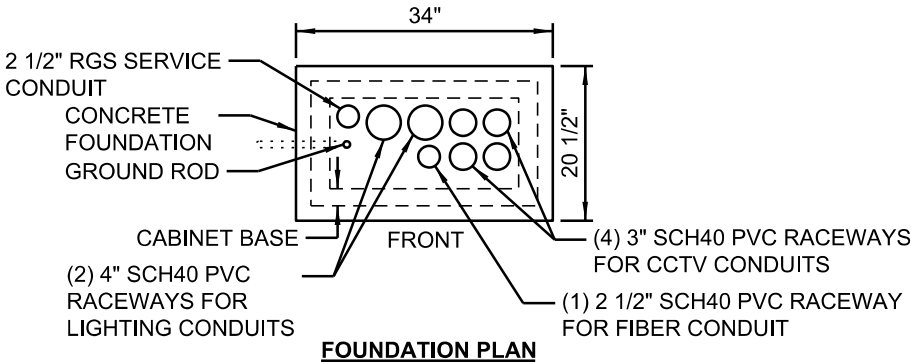

FOUNDATION PLAN

NOTES:

1. CONTRACTOR TO COORDINATE WITH CITY TO VERIFY IF METER IS REQUIRED.
2. TOP NAMEPLATE LOGO "STREET LIGHTING CITY OF NAPERVILLE", AND BOTTOM NAMEPLATE LOGO "CONTACT THE DEPARTMENT OF PUBLIC WORKS AT 630-420-6187 TO REPORT PROBLEMS".
3. ADHESIVE CONTROLLER ID LABEL LOCATED ON BACK OF CONTROLLER AT UPPER LEFT CORNER TOP ON OUTSIDE (SEE DETAIL 690.10).

City of Naperville STANDARD DETAIL	STREET LIGHTING CONTROLLER SCHEMATIC-225A (CBD)	LIGHTING 22 690.22
	EFFECTIVE: 4/20/2020	SHEET 1 OF 3

LIGHTING CONTROLLER CIRCUIT LOADS (NOTE 2)								
CIRCUIT ID	ROADWAY LUMINAIRE		POSTTOP LUMINAIRE		RECEPTACLE		TOTAL CIRCUIT LOAD	
	QTY.	LOAD/FIXT. (WATTS)	QTY.	LOAD/FIXT. (WATTS)	QTY.	LOAD/RECPT. (WATTS)	(WATTS)	AMPS (VOLTS)
A						W	W	A (120V)
B						W	W	A (120V)
C						W	W	A (120V)
D						W	W	A (120V)
E		W		W			W	A (120V)
F		W		W			W	A (120V)
G		W		W			W	A (120V)
H		W		W			W	A (120V)
TOTAL		N/A		N/A		N/A	W	A (240V)

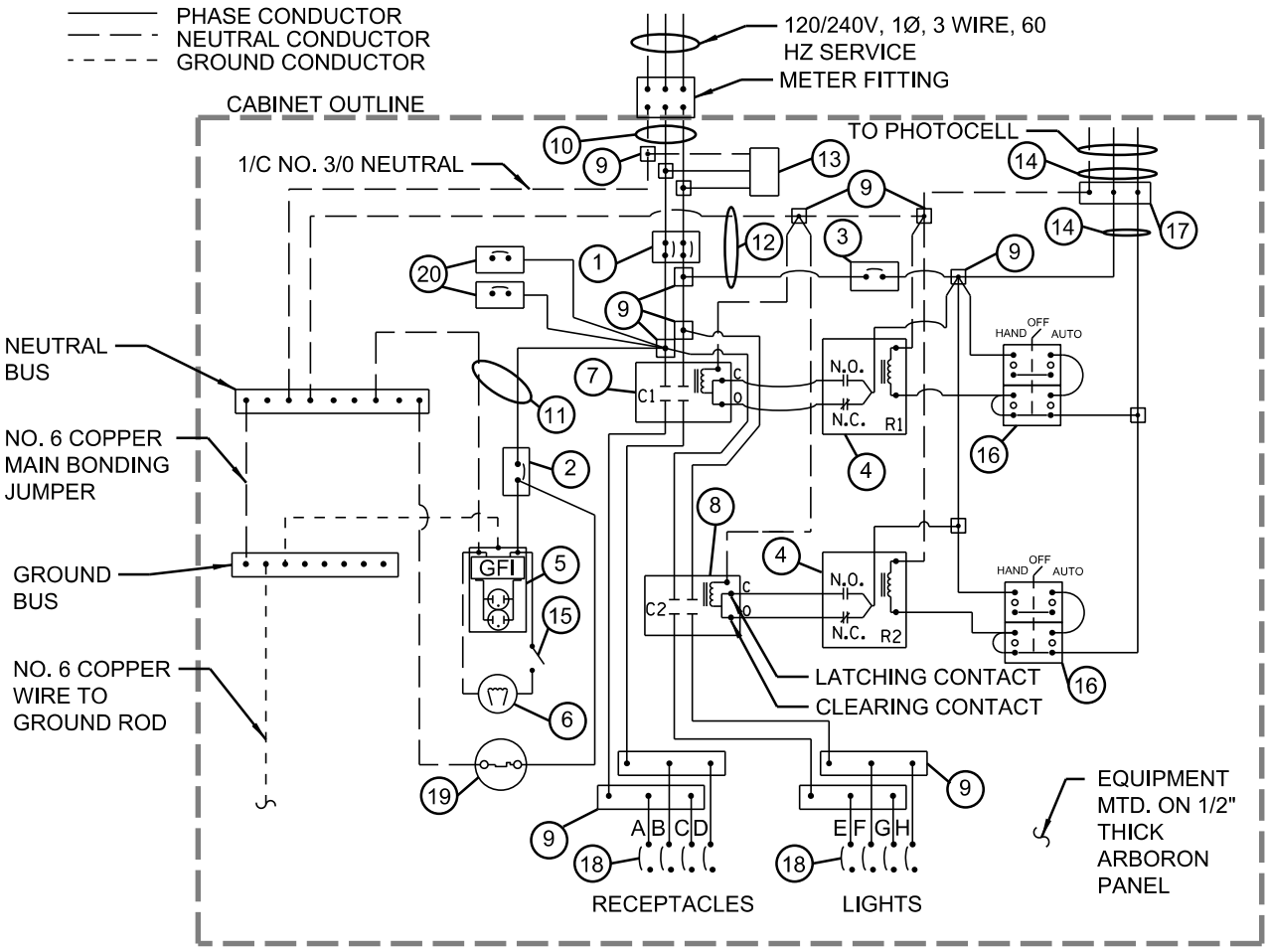

NOTES:

1. IN ADDITION TO THE TERMINATIONS SHOWN, THE NEUTRAL AND GROUND BUS BARS SHALL ACCOMODATE A MINIMUM OF 8 ADDITIONAL TERMINATORS (#2-#14).

2. CIRCUIT LOAD TABLE TO BE FILLED OUT BY DESIGNER.

ITEM	SPECIFICATION	MFG./MODEL NO. OR APPR'D EQUAL
1 MAIN CIRCUIT BREAKER	MOLDED CASE, PANEL -MOUNTED, 225 AMPERE, 2P, 240V SERVICE RATING, 65KAIC	EATON ED2225L 2P 225A
2 LAMP/HEATER CIRCUIT BREAKER	MOLDED CASE, PANEL-MOUNTED, 15 AMPERE, 1P, 120V RATING, 14KAIC	EATON EHD1015 1P 15A
3 PHOTOELECTRIC CONTROL CIRCUIT BREAKER	MOLDED CASE, PANEL -MOUNTED, 15 AMPERE, 1P, 120V RATING, 14KAIC	EATON EHD1015 1P 15A
4 AUXILIARY RELAY	120 V OPERATED DPDT 60 HZ COIL, 2 NO & 2 NC CONTACTS, ADJUSTABLE TIME DELAY 10A	NTE NO. R28-11A10-120L
5 CABINET RECEPTACLE AND BOX	COMMERCIAL GRADE GFCI 20A/120V, W.R., MOUNTED IN A WEATHERPROOF CAST ALUMINUM SINGLE GANG BOX WITH WEATHERPROOF COVER	RECEPTACLE: HUBBELL NO. GFRST20I BOX: INTERMATIC NO. B-5V COVER: INTERMATIC NO. FG-1DCV
6 CABINET LIGHT	LED VAPORPROOF FIXTURE 16W 4000°K	RAB NO. VXLED13NDG-3/4
7 CONTACTOR #1	100 AMPERE, 2P, 120V COIL, MECHANICALLY HELD	SQUARE D NO. 8903SQO10V02
8 CONTACTOR #2	60 AMPERE, 2P, 120V COIL, MECHANICALLY HELD	SQUARE D NO. 8903SPO10V02
9 POWER DISTRIBUTION BLOCK	600 VOLT, INSULATED, SIZE AS REQ'D, 10KAIC	N/A
10 SERVICE CABLES	3-600V XLP #3/0	MARATHON
11 LAMPHOLDER WIRE	2-600V XLP NO. 12	N/A
12 CONTROL WIRE	2-600V XLP NO. 12	N/A
13 SURGE ARRESTOR	10 K AMPERE RATING	SQUARE D NO. SDSA 1175
14 PHOTOELECTRIC CONTROL WIRE	3-600V XLP NO. 10	N/A
15 DOOR SWITCH	20A/120V, DOOR MOUNTED SNAP ACTION TYPE PLUNGER SWITCH	HONEYWELL NO. BA-2RQ1-A2
16 HAND-AUTO-OFF CONTROL SWITCH	20A, 3 POS. MTD IN CAST ALUM. ENCLOSURE	SQUARE D NO. 9001 KYK 111
17 PHOTOCELL TERMINAL BLOCK	3 TERMINAL, SCREW TYPE, MAX. #10 WIRE	CINCH NO. 3-142
18 BRANCH LINE CIRCUIT BREAKERS	MOLDED CASE, PANEL-MOUNTED, (8), 30A, 1P, 120V RATING, 14KAIC	EATON EHD1030 1P 30A
19 CABINET HEATER	200W-120V, FORCED FAN, FULLY ENCLOSED INTEGRAL THERMOSTAT (NOT ON EQUIPMENT PANEL)	HOFFMAN NO. DAH2001A
20 CCTV CIRCUIT BREAKERS	MOLDED CAST, PANEL MOUNTED, (2) 20A-1P, 120V RATING, 14 KAIC	EATON EHD1020 1P 20A

NOTES:

1. THE LIGHTING CONTROLLER TOGETHER WITH ALL OF ITS COMPONENTS SHALL BE UL LISTED AS AN "ENCLOSED INDUSTRIAL CONTROL PANEL" UNDER UL 508A.
2. CONNECTION OF SURGE ARRESTOR TO LINE SIDE OF MAIN CIRCUIT BREAKER SHALL NOT BE "DOUBLE LUGGED."
3. THE MAIN CIRCUIT BREAKER SHALL BE LABELED "SERVICE DISCONNECT."
4. ALL SWITCHES AND CONTROLS SHALL BE IDENTIFIED USING TWO COLOR ENGRAVED NAMEPLATES.
5. THE PANEL MANUFACTURER SHALL LABEL THE CABINET WITH THE APPROPRIATE ARC FLASH WARNING AND PERSONNEL PROTECTION EQUIPMENT REQUIRED FOR SERVICING.
6. ALL EXPOSED BUSBARS SHALL BE INSULATED.
7. POWER WIRING SHALL BE COPPER RHH/RHW 600 VOLTS.

NOTES:

1. EXISTING UNDERGROUND CONDUCTORS MAY CONSIST OF DIRECT BURIED CONDUCTORS WITHOUT A GROUND WIRE. IF THESE CONDITIONS ARE ENCOUNTERED, CONNECT BONDING WIRE TO GROUNDING LUG IF AVAILABLE AND TO GROUND ROD IF AVAILABLE.
2. 1/C #6 XLP/USE-2 BONDING JUMPER (GREEN).

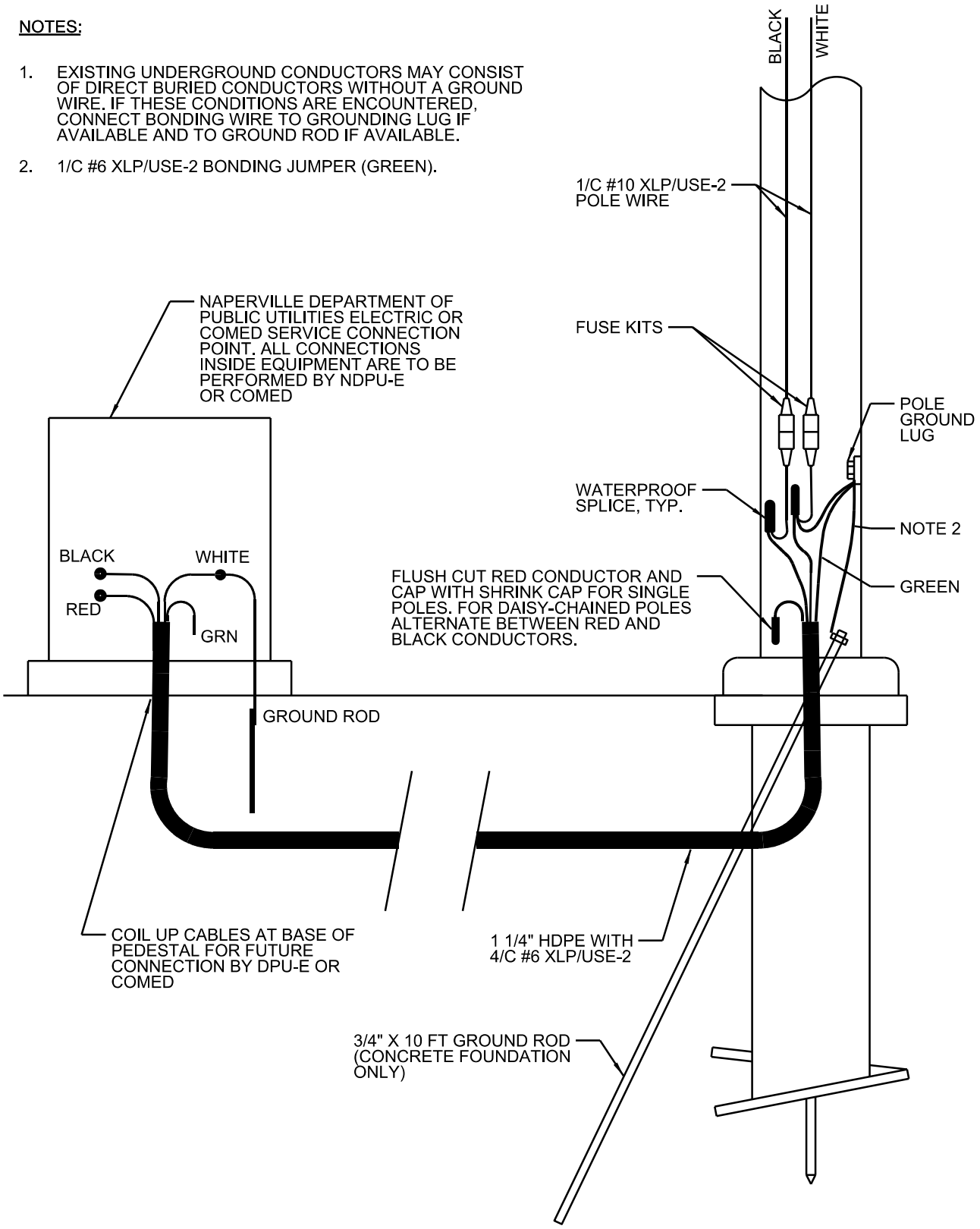

DIRECT CONNECTED LIGHT POLE

City of Naperville STANDARD DETAIL	TYPICAL STREET LIGHT CONNECTION	LIGHTING 23
	EFFECTIVE: 4/20/2020 — SHEET 1 OF 3	690.23

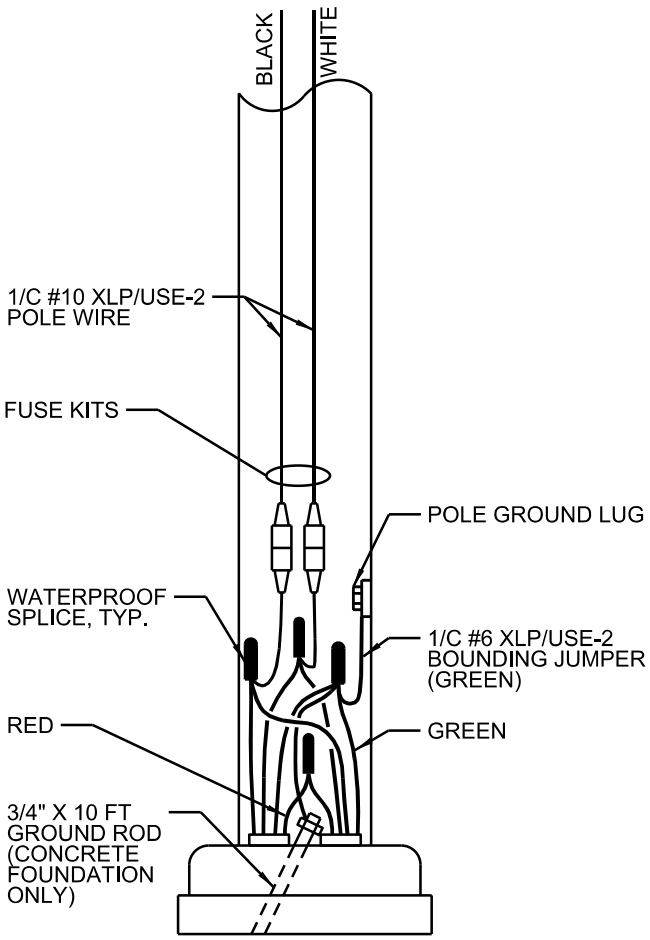

LIGHT POLE ON CONTROLLER

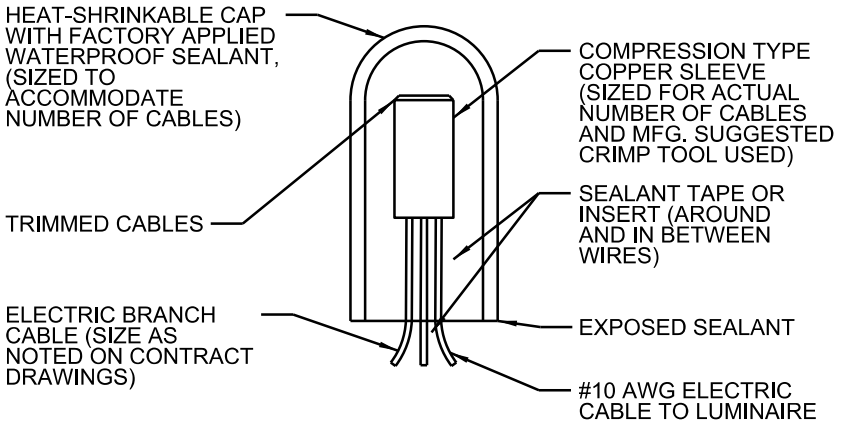

SPLICE DETAIL

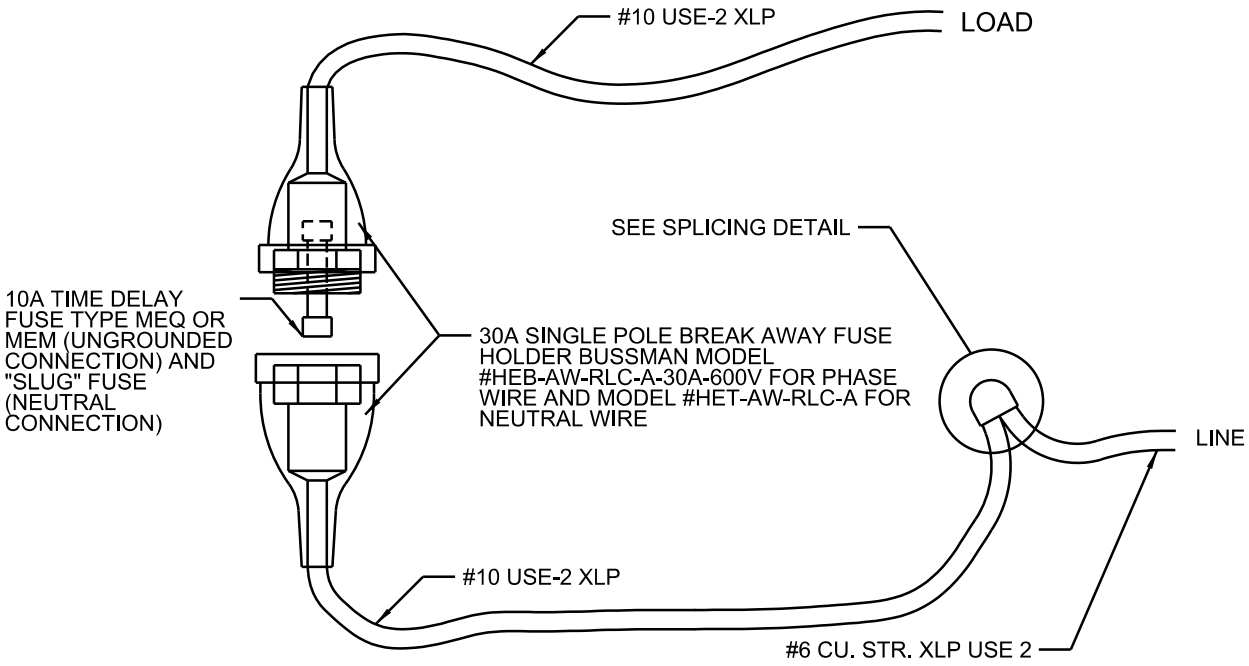

TYPICAL FUSE HOLDER CONNECTION IN POLE

City of Naperville STANDARD DETAIL	TYPICAL STREET LIGHT CONNECTION	LIGHTING 23
	EFFECTIVE: 4/20/2020 — SHEET 3 OF 3	690.23

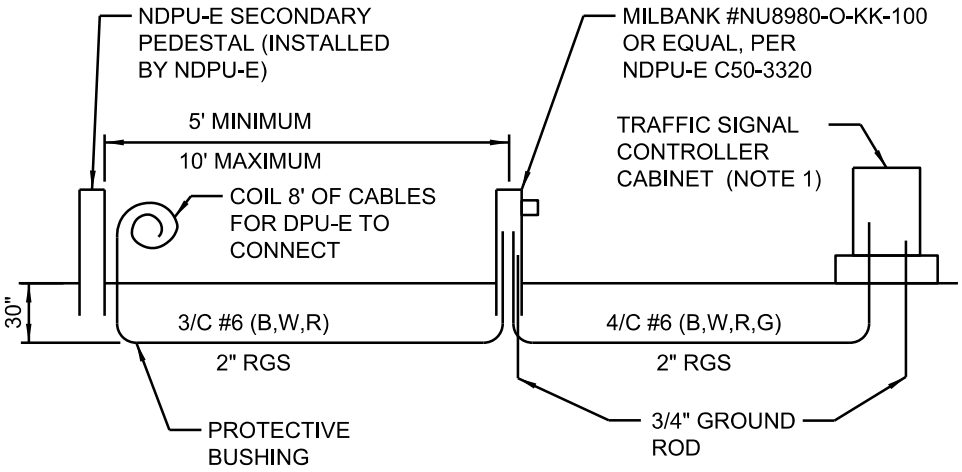

SERVICE CONNECTION TO TRAFFIC SIGNAL CONTROLLER

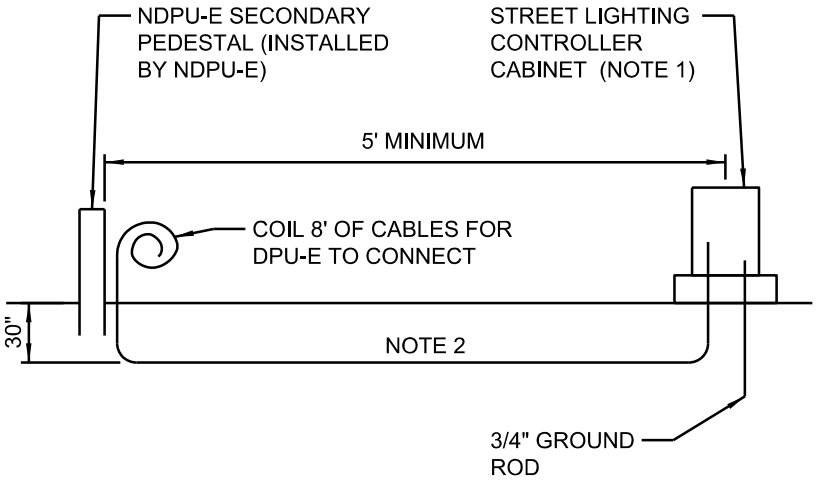

SERVICE CONNECTION TO STREET LIGHTING CONTROLLER

NOTES:

1. INSTALL THREADED BUSHING WITH LUG ON RGS SERVICE CONDUIT: CONNECT BUSHING WITH 1/C #6 GREEN CABLE TO GROUND ROD TO GREEN TERMINAL STRAP OF CONTROLLER.
2. 3/C #2 (B,W,R) IN 2" RGS FOR 100A CONTROLLER OR 3/C #3/0 (B,W,R) IN 2 1/2" RGS FOR 225A CONTROLLER.

City of Naperville STANDARD DETAIL	SERVICE CONNECTIONS	LIGHTING 24
	EFFECTIVE: 4/20/2020 / SHEET 1 OF 1	690.24

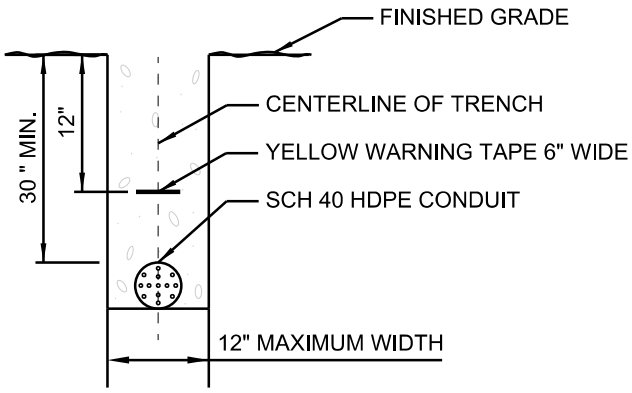

TRENCH CROSS SECTION (NON-PAVED AREAS)

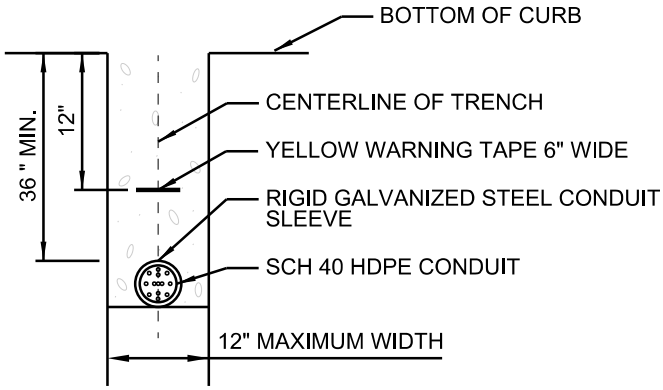

TRENCH CROSS SECTION (UNDER ROADWAYS & COMMERCIAL DRIVEWAYS)

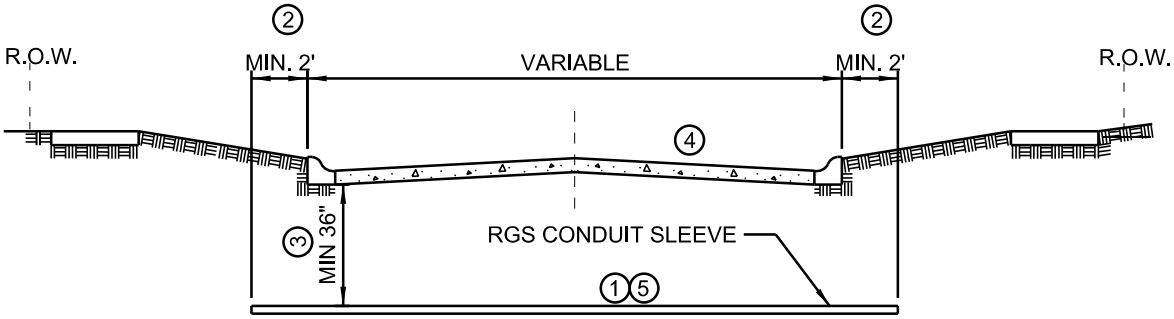

ROADWAY / PAVEMENT CROSSING

1. SLEEVE SHALL BE HEAVY WALL RIGID GALVANIZED STEEL (RGS) CONDUIT.
2. SLEEVE SHALL EXTEND A MINIMUM OF 2 FT. BEYOND BACK OF CURB.
3. SLEEVE SHALL BE A MINIMUM OF 36" BELOW ROADWAY OR CURB BOTTOM.
4. CONTRACTOR SHALL PERFORM EXPLORATORY POTHOLES IN PAVEMENT IN ACCORDANCE WITH THE SPECIAL PROVISIONS AND AS DIRECTED BY THE ENGINEER.
5. CONDUIT SHALL BE PUSHED UNDER EXISTING ROADWAY AND COMMERCIAL DRIVEWAYS UNLESS OTHERWISE APPROVED BY THE CITY.

City of Naperville **STANDARD DETAIL**	**TYPICAL TRENCH DETAIL** EFFECTIVE: 4/20/2020 | SHEET 1 OF 1	LIGHTING 30 **690.30**